目　录 CONTENTS

VALVE PART

1 … ……一片式内螺纹球阀系列
1PC Thread Ball Valve Series

3 … ……二片式内螺纹球阀系列
2PC Thread Ball Valve Series

5 … ……三片式内螺纹球阀系列
3PC Thread Ball Valve Series

12 … ……气动、电动、法兰球阀系列
Pneumatic/Electic actuator/Flanged Ball Valve Series

13……不锈钢内螺纹止回阀系列
Stainless Steel Thread Check Valve Series

15……Y型内螺纹过滤器系列
Y Type Thread Strainer

16……不锈钢内螺纹闸阀系列
Stainless Steel thread gate valve series

17……内螺纹截止阀系列
Thread Globe Valve Series

18……角座阀系列
Flanged Pneumatic Angle seat Valve Series

23……法兰球阀系列
Flanged Ball Valve Series

28……法兰截止阀系列
Flang Globe Valve Series

32……法兰闸阀系列
Flanged Gate Valve Series

36……法兰止回阀系列
Flanged Check Valve Series

41……法兰Y型过滤器系列
Y type Flanged Strainer Series

FITTING PART

43……快装接头系列
Quick Connector Series

49……丝扣管件系列
Threaded Fittings Series

57……不锈钢无缝管件系列
Stainless Steel Semless Fitting Series



Whatsapp:+852-59345951　E-mail: info@valve-yz.com　Skype: blue.sky13

一片式内螺纹球阀1PC Thread ball valve



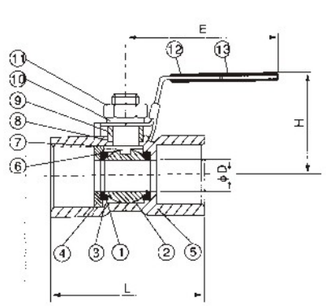



应用规范Application Norm

公称压力：1.6-6.4MPa

适用温度范围：-20~232℃~350℃

适用介质：水、油、气及某些腐蚀性液体(W、O、G)

螺纹类型：G·NPT.BSPT.BSP.DIN259/2999

Nominal pressuree：1.6-6.4MPa
Temperature Range：-20-232℃~350℃
Applying medium：water，oil，air and some CorrosiVe liquid(W、O、G)
Thread type：G·NPT.BSPT.BSP.DIN259/2999

主要零件材料Main parts and materials

序号 Number	零件名称 Part name	材质 Material
1	密封圈 Joint ring	聚四聚乙烯 PTFE
2	球体 Ball	不锈钢 Stainless steel SS316
3	密封垫 Joint Gasket	聚四氟乙烯 PTFE
4	阀盖 Valve Cap	不锈钢 Stainless steel SS316
5	阀体 Valve Boby	不锈钢 Stainless steel CF8M
6	阀杆 Valve Stem	不锈钢 Stainless steel SS316
7	止推垫圈 Thrust washer	聚四氟乙烯 PTFE
8	填料 Packig	聚四氟乙烯 PTFE
9	填料压盖螺母 Gland nut	不锈钢 Stainless steel SS304
10	垫圈 Washer	不锈钢 Stainless steel SS304
11	阀杆螺母 Stem nut	不锈钢 Stainless steel SS304
12	手柄套 Handle sleeve	塑料 Packing
13	手柄 Handle	不锈钢 Stainless steel SS304

主要尺寸 Main dimensions

单位:mm Unit:mm

SIZE	1/4"	3/8"	1/2"	3/4"	1"	11/4"	11/2"	2"
D	5.0	7.0	9.2	12.5	15.0	20.0	24.5	32
L	40	45	55.4	58.5	69.3	77	82	95.5
H	35	37	43.5	47	50	57	69	74.5
E	64	70	90	90	103	103	127	127

Whatsapp:+852-59345951 E-mail: info@valve-yz.com Skype: blue.sky1

YUzheng Valve Pipefitting Manufacturing 誉正阀门 www.valve-yz.com

一片式内螺纹连接六角碳钢球阀 Hexagonal carbon steel ball valve



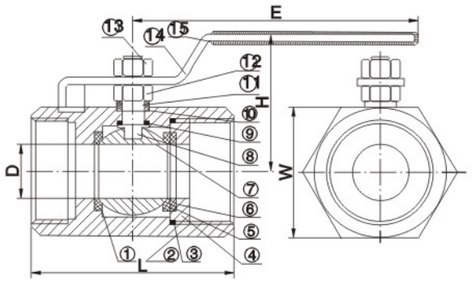

技术规范

>设计标准：GB/T12224、GB/T8464
>压力-温度额定值：GB/T12224
>结构长度：GB/T15188.3
>连接螺纹标准：G、Rc、Rp、NPT、BSP、BSPT、DIN259/2999
>试验与检验标准：GB/T13927
>主要材质：WCB、CF8(304)、CF8M(316)
>驱动方式：手动

Technical Standard

>Design Standard:GB/T12224、GB/T8464
>Pressure-Temperature Rating:GB/T12224
>Face To Face Std:GB/T15188.3
>End Connection Std:G、Rc、Rp、NPT、BSP、BSPT、DIN259/2999
>Test Standard:GB/T13927
>Material:WCB、CF8(304)、CF8M(316)
>Operated Way: Handle

材料列表 Materiallist

No	部件名称	Part Name	材料 Material	QTY
1	下密封圈	Joint ring	PTFE	1
2	阀体	Body	A105	1
3	密封垫	Joint gasket	PTFE	1
4	锁紧螺母	Lock nut	A105	1
5	上密封圈	Joint ring	PTFE	1
6	垫片	Stem washer	304	1
7	球体	Ball	304/316	1
8	阀杆	Stem	304/316	1
9	止推垫片	Thrust washer	PTFE	1
10	填料	Stem packing	PTFE	1
11	填料压套	Gland	304	1
12	填料压盖	Gland nut	304	1
13	阀杆螺母	Stem nut	304	1
14	手柄	Handle	A3	1
15	手柄套	Handle cover	塑料PLASTIC	1

性能规范 Specifications

公称通径 Size Range	公称压力 Working Pressure	适用温度 Suitable Temperature	适用介质 Suitable Medium
DN	PN	-29~200℃	CF8(304)硝酸类 Nitric acid
6~100mm	1.6~6.4MPa		CF8M(316)醋酸类 Acetic acid
			水、天然气、油品等 Water Natural gas 、Oil

尺寸列表 Dimension List

单位 Unit:mm

Size / Item	1/4"	3/8"	1/2"	3/4"	1"	1 1/4"	1 1/2"	2"
D	5.0	7.0	10.5	12.5	15	20	25	32
L	41	57	60	67	74	74	83	114
H	23	34	35	40	67	75	83	90
E	65	91	95	99	100	105	135	160
W	19	27	30	35.5	42	53	48	74.5

Whatsapp:+852-59345951 E-mail: info@valve-yz.com Skype: blue.sky1

迷你型外螺纹球阀 Mini ball valve(M/M)



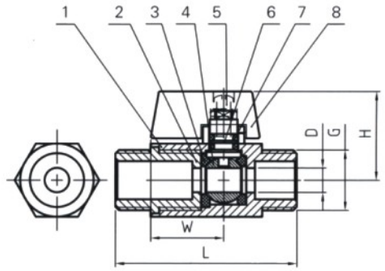

特点:
- ◎管螺纹可按:NPT.BSPT.BSPP
- ◎温度范围:-20℃--150℃
- ◎适用介质:水、油、气
- ◎公称压力:1.6~6.4MPa
- ◎精密铸造阀体
- ◎材质:CARBON STEEL/SCPH2/WCB
  STAINLESS STEE/304/SCS13
  STAINLESS STEE/316/SCS14

FEATURES:
- ◎PIPE THREAD IN ALLORDANCE:NPT.BSPT.BSPP
- ◎TEMPERATURE RANGE:-20℃~150℃
- ◎SUITABLE IVIEDIUIVI: WATE、OIL、AIR
- ◎NOMINAL PRESSURE: 1.6~6.4MPa
- ◎INVESTMENT CASTING BODY
- ◎MATERIAL: CARBON STEE/SCPH2/WCB
  STAINLESS STEE/304/SCS13
  STAINLESS STEE/316/SCS14

主要零件材料
Main parts and materials

NO	NAME	MATERIAL
1	BODY	SS304/SS316
2	CAP	SS304/SS316
3	SEAT	PTEE
4	BALL	SS304/SS316
5	SCREW	SS304/SS316
6	STEM	SS304/SS316
7	O-RING	NBR
8	HANDLE	SS304/SS316

PRESSURE TEMPERATURE
1/4"-4"

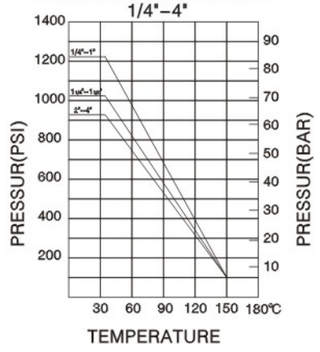

尺寸列表 Dimension list

NPS	G	D	L	W	H
DN6	1/4"	7	50	23	26
DN10	3/8"	7	50	23	26
DN15	1 /2"	9	58	23	28
DN20	3 /4"	12	70	23	31
DN25	1"	15	83	23	34

Whatsapp:+852-59345951 E-mail: info@valve-yz.com Skype: blue.sky1

迷你型球阀 Mini ball valve



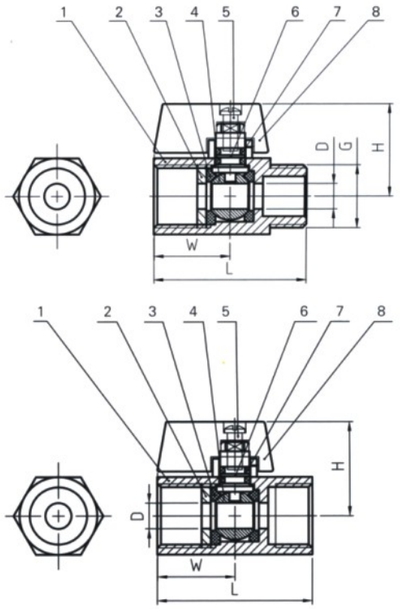

特点:
- ◎螺纹可按:NPT.BSPT.BSPP
- ◎温度范围:-20℃-150℃
- ◎适用介质:水、油、气体
- ◎公称压力:1.6~6.4MPa
- ◎精密铸造阀体材质:CARBON STEE/SCPH2/WCB
  STAINLESS STEE/304/SCS13
  STAINLESS STEE/316/SCS14

FEATURES:
- ◎PIPE THREAD IN ACCORDANCE: NPT.BSPT.BSPP
- ◎TEMPERATURE RANGE:-20℃~150℃
- ◎SUITABLE MEDIUM:WATER,OIL,AIR
- ◎NOMINAL PRESSURE:1.6~6.4MPa
- ◎INVESTMENT CASTING BODY
- ◎MATERIAL: CARBON STEE/SCPH2/WCB
  STAINLESS STEE/304/SCS13
  STAINLESS STEE/316/SCS14

主要零件材料
Main parts and materials

NO	NAME	MATERIAL
1	BODY	SS304/SS316
2	CAP	SS304/SS316
3	SEAT	PTEE
4	BALL	SS304/SS316
5	SCREW	SS304/SS316
6	STEM	SS304/SS316
7	O-RING	NBR
8	HANDLE	SS304/SS316

尺寸列表 Dimension list

NPS	G	D	L	W	H
DN6	1/ 4"	7	42	23	26
DN10	3/ 8"	7	42	23	26
DN15	1/ 2"	9	46	23	28
DN20	3/ 4"	12	54	23	31
DN25	1"	15	62	23	34

PRESSURE TEMPERATURE
1/4"-4"

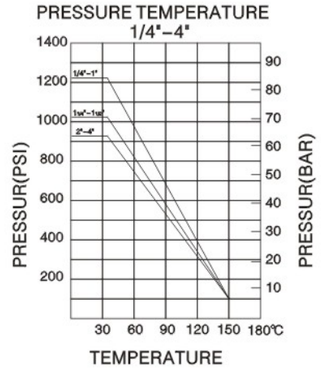

Whatsapp:+852-59345951 E-mail: info@valve-yz.com Skype: blue.sky1

二片式球阀，德标M3 2PC Ball valve



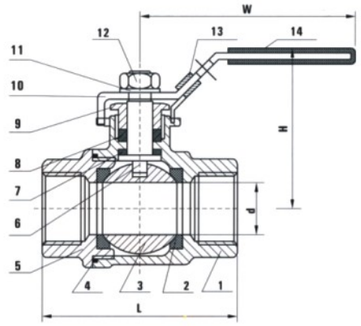

产品说明
- 精密铸造阀体
- 防脱出阀杆
- 全通径设计
- 球槽减压孔设计
- 各种标准螺纹: NPT/BSPP/BSPT/PT
- 带锁手柄可选配
- 工作压力: 1000PSI/PN63

标准
- 设计标准：ASME B16.34
- 结构长度标准：DIN3202-M3
- 螺纹标准：ANSI B1.20.1
  BS 21/2799
  DIN 259/2999
  ISO 228
- 检测标准：API598

PRODUCT DESCRIPTION:
Investment Casting Body
Blow-Out Proof Stem
Full Port
Pressure Blance Hole In Ball Slot
ThreadsTypes: NPT/BSPP/BSPT/PT
Locking Deuice Handle Available
Working Pressure:1000PSI/PN63

STANDARD:
Design Acc: ASME B16.34
Length Acc:DIN3202-M3
Threads Acc: ANSI B1.20.1
  BS 21/2799
  DIN 259/2999
  ISO 228
Inspection&Testing Acc: API 598

主要零件材料 Main parts and materials

Item	Part 零配件		Material 材质		
1	Body	阀体	CF8M	CF8	WCB
2	Ball Seat	阀座	PTFE/RPTFE		
3	Ball	球体	316	304	304
4	Body Gasket	密封圈	PTFF		
5	Cap	阀盖	CF8M	CF8	WCB
6	Stem	阀杆	316	304	304
7	Thrust Washer	止推垫片	PTFE		
8	Stem Packing	填料	PTFE		
9	Gland Nut	压盖	304		
10	Handle	手柄	304		
11	Sping Washer	弹簧垫圈	304		
12	Nut	螺母	304		
13	Locking Device	锁装置	301		
14	Handle Cover	手柄套	Plastic		

尺寸列表 Dimension list

Size	ϕd	L	H	W
1/4"	10.5	50	50	100
3/8"	12	60	50	100
1/2"	15	75	60	130
3/4"	20	80	64	130
1"	25	90	71	165
1-1/4"	32	110	78	165
1-1/2"	38	120	86	190
2"	49	140	95	190
2-1/2"	65	185	130	215
3"	78	205	148	250
4"	100	240	180	280

Whatsapp:+852-59345951 E-mail: info@valve-yz.com Skype: blue.sky1

YUzheng Valve Pipefitting Manufacturing 誉正阀门 www.valve-yz.com

二片式高平台内螺纹球阀 2PC High mounting pad screwed ball valve



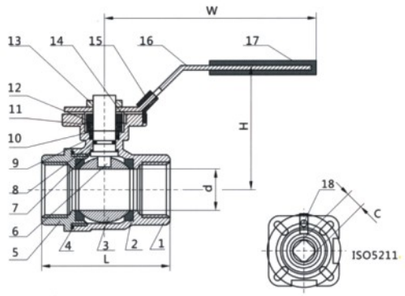

产品说明
- 精密铸造阀体
- 防脱出阀杆
- 全通径设计
- 球槽减压孔设计
- 直装平台设计
- 防静电设计
- 各种标准螺纹: NPT/BSPP/BSPT/PT
- 带锁手柄可选配
- 工作压力:1000PSI/PN63
- DIN3202-M3结构长度可选

标准
- 设计标准:ASME B16.34
- 螺纹标准:ANSI B1.20.1
  BS 21/2799
  DIN 259/2999
  ISO 228
- 检测标准:API598

PRODUCT DESCRIPTION:
Investment Casting Body
Blow-Out Proof Stem
Full Port
Pressure Blante Hole In Ball Slot
ISO 5211 Direct Mounting Pad
Anti-Static Device on Ball and Body
Threads Types: NPT/BSPP/BSPT/PT
Lacking Device Handle Available
Working Pressure:1000PSI/PN63
Length Acc to DIN 3202 -M3 is available

STANDARD:
Design Acc: ASME B16.34
Threads Acc:ANSI B1.20.1
  BS 21/2799
  DIN 259/2999
  ISO 228
Inspection&Testing Acc: API 598

主要零件材料 Main parts and materials

Item	Part 零配件		Material 材质		
1	Body	阀体	CF8M	CF8	WCB
2	Ball Seat	阀座	PTFE/RPTFE		
3	Ball	球体	316	304	304
4	Body Gasket	密封圈	PTFE		
5	Cap	阀盖	CF8M	Cf8	WCB
6	Stem	阀杆	316	304	304
7	Thrust Washer	止推垫片	PTFE		
8	O-Ring	O型圈	VITON		
9	Stem Packing	填料	PTFE		
10	Gland Nut	压盖	304		
11	Bellevelle Washer	螺簧	301		
12	Stap Nut	止动垫圈	304		
13	Nut	螺母	304		
14	Stap Washer	止动垫圈	304		
15	Locking Device	锁装置	301		
16	Handle	手柄	304		
17	Handle Cover	手柄套	Plastic		
18	Location Pin	定位插销	301		

尺寸列表 Dimension list

Size	ϕd	L		H	W	C	ISO5211
		Normal type	DIN3202-M3				
1/4"	10.5	50	50	60	110	9	F03
3/8"	12	50	60	60	110	9	F03
1/2"	15	60	75	64	110	9	F03/F04
3/4"	20	70	80	80	120	9	F03/F04
1"	25	90	90	93	145	11	F04/F05
1-1/4"	32	95	110	95	145	11	F04/F05
1-1/2"	38	106	120	126	160	14	F05/F07
2"	49	120	140	129	170	14	F05/F07
2-1/2"	65	160	185	148	230	17	F07/F10
3"	78	180	205	152	260	17	F07/F10
4"	100	220	240	187	300	19	F07/F10

Whatsapp:+852-59345951 E-mail: info@valve-yz.com Skype: blue.sky1

二片式内螺纹球阀2PC Thread ball valve





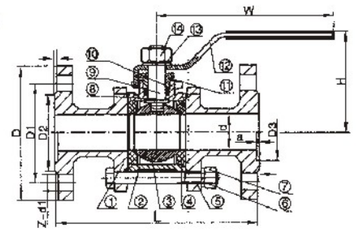

应用规范Application Norm

公称压力：1.6–6.4MPa
适用温度范围：–20～232℃～350℃
适用介质：水、油、气及某些腐蚀性液体(W、O、G)
螺纹类型：G・NPT.BSPT.BSP.DIN259/2999

Nominal pressuree:1.6–6.4MPa
Temperature Range:–20～232℃～350℃
Applying medium:water,oil,air and some CorrosiVe liquid(W、O、G)
Thread type:G・NPT. BSPT.BSP.DIN259/2999

主要零件材料Main parts and materials

序号Number	零件名称 Part name	材质 Material	
		不锈钢 Stainless steel	碳钢 Carbon steel
1	阀体Valve Body	不锈钢Stainless steel CF8M	不锈钢Stainless steel WCB
2	球体Valve Ball	不锈钢Stainless steel SS316	不锈钢Stainless steel SS304
3	密封圈Joint ring	聚四氟乙烯PTFE	聚四氟乙烯PTFE
4	密封垫Joint Gasket	聚四氟乙烯PTFE	聚四氟乙烯PTFE
5	阀盖ValVe Cap	不锈钢Stainless steel CF8M	不锈钢Stainless steel WCB
6	阀杆ValveStem	不锈钢Stainless steel SS316	不锈钢Stainless steel SS304
7	止推垫圈Thrust washer	聚四氟乙烯PTFE	聚四氟乙烯PTFE
8	填料Packing	聚四氟乙烯PTFE	聚四氟乙烯PTFE
9	填料压盖螺母Glandnut	不锈钢Stainless steel SS304	不锈钢Stainless steel SS304
10	手柄Handle	不锈钢Stainless steel SS304	不锈钢Stainless steel SS304
11	垫圈Washer	不锈钢Stainless steel SS304	不锈钢Stainless steel SS304
12	阀杆螺母Stem nut	不锈钢Stainless steel SS304	不锈钢Stainless steel SS304
13	手柄套Handle sleeve	塑料Plastic	塑料Plastic

主要连接尺寸 Main dimensions

单位Unit：mm

SIZE	1/4"	3/8"	1/2"	3/4"	1"	11/4"	11/2"	2"	21/2"	3"	4"
D	11.6	12.7	15	20	25	32	38	50	65	80	100
L	54	54	62	71	86	100	107	125	150	174	214
H	50	50	60	64	71	78	86	95	130	148	180
E	100	1OO	130	130	165	165	190	190	250	250	280

注：二片式球阀连接形式另有对焊(BW)承插焊(SW)，并均可带国际ISO支架和锁定装置。
Note：two–blade ball valve has two connection ways of butt–welding(BW)and socket welding(SW)，and may be epuipped with,the bracket and lockdevice in conformity with ISO.

Whatsapp:+852-59345951 E-mail: info@valve-yz.com Skype: blue.sky1

YUzheng Valve Pipefitting Manufacturing 誉正阀门 www.valve-yz.com

3PC全通径1000PSI不锈钢ISO5211直装球阀



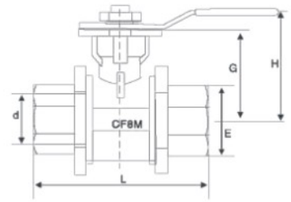

特点:
3PC结构设计
全通径
产品规格:1/2"–2"
工作压力:1000PSI
工作温度<150℃(PPL<300℃)
内螺纹端或承插焊端或对焊端
螺纹端可按BSPT、NPT、DIN2999制造
可选带锁手柄
配ISO5211直接驱动装置平台

Feature
3PC Body
Full Bore
Size: 1/2"–2"
Working Pressure: 1000PSI
Working Temperature<150℃(PPL<300℃)
Threaded End or SW or BW End
Threaded End:BSPT、NPT、DIN2999
Optional Locked device Handle
ISO5211 Direct Mounting Pad

材料列表Material List

NO	部件名称	Part Name	材料Material
1	阀体	Body	CF 8M
2	阀盖	Cap	
3	阀座	Seat	RPTFE
4	球	Ball	
5	密封垫	Gasket	PTFE
6	阀杆密封	Stem Seal	
7	阀杆	Stem	SS 316
8	防静电装置	Anti–Static Device	
9	阀杆填料	Stem Packing	PTFE
10	填料压盖	Packing Gland	
11	弹性垫圈	Spring Washer	SS 301
12	手柄	Handle	
13	螺母	Stem Nut	SS 304

尺寸列表Dimension List

NPS	d	E	G	H	W	L
1/2"	15	27	39	65	127	71
3/4"	20	33	45	76	131	79
1"	25	40	52	86	137	86
1–1/4"	32	49	58	90	165	107
1–1/2"	38	54	71	110	175	118
2"	50	67	79	125	183	138

Whatsapp:+852-59345951 E-mail: info@valve-yz.com Skype: blue.sky1

三片式内螺纹球阀3PC Thread ball valve



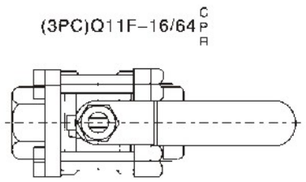

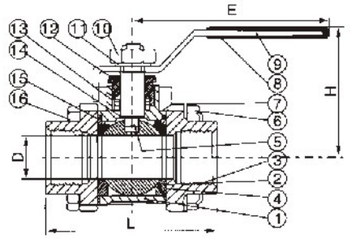

应用规范Application Norm

公称压力：1.6-6.4MPa
适用温度范围：-20～232℃～350℃
适用介质：水、油、气及某些腐蚀性液体(W、O、G)
承插焊标准：（SW）：GB12224・ANSIB16・25

Nominal pressuree:1.6-6.4MPa
Temperature Range:-20～232℃～350℃
Applying medium:water,oil,air and some Corrosive liquid(W、O、G)
Socket-welding standard:GB12224・ANSIB16・25



主要零件材料Main parts and materials

序号 Number	零件名称 Partname	材质 Materal	
		不锈钢 Stainless steel	碳钢 Carbon steel
1	阀体Valve Body	不锈钢Stainless steel CF8M	碳钢Carbon steel WCB
2	密封圈Joint ring	聚四氟乙烯PTFE	聚四氟乙烯PTFE
3	阀盖ValVe Cap	．不锈钢Stainless steel CF8M	碳钢Carbon steel WCB
4	球体Valve Ball	不锈钢Stainless steel SS304/SS316	不锈钢Stainless steel SS304/SS316
5	阀杆Valve Stem	不锈钢Stainless steel SS304/SS316	不锈钢Stainless steel SS304/SS316
6	螺母Nut	不锈钢Stainless steel SS304/SS316	FCD45
7	垫圈Washer	不锈钢Stainless steel SS304/SS316	FCD45
8	手柄套Handle sleeve	塑料Plastic	塑料Plastic
9	手柄Handle	不锈钢Stainless steel SS304/SS316	不锈钢Stainless steel SS304/SS316
10	阀杆螺母Stem nut	不锈钢Stainless steel SS304/SS316	B7
11	垫圈StemWasher	不锈钢Seainless steel SS304/SS316	不锈钢Stainless steel SS304/SS316
12	填料压盖螺母Gland nut	不锈钢Siainless steel SS304/SS316	FCD45
13	填料Packing	聚四氟乙烯PTFE	聚四氟乙烯PTFE
14	止推垫圈Thrust washer	聚四氟乙烯PTFE	聚四氟乙烯PTFE
15	填料Packing	聚四氟乙烯PTFE	聚四氟乙烯PTFE
16	螺栓Bolt	不锈钢Siainless steel SS304/SS316	B8

主要尺寸 Main dimensions

单位Unit:mm

SIZE	1/4	3/8	1/2	3/4	1	11/4	11/2	2	21/2	3	4
D	11.6	12.7	15	20	25	32	38	50	65	80	100
L	68	68	72	85	90	112	120	145	185	215	270
H	50	50	60	64	71	78	86	95	130	148	173
E	100	100	130	130	165	165	190	190	250	250	280
F	14.1	17.6	21.8	27.5	34.7	43.0	49.0	61.5	77.0	90.0	115.2
p	10	10	10	13	13	16	16	18	18	20	20

Whatsapp:+852-59345951 E-mail: info@valve-yz.com Skype: blue.sky1

YUzheng Valve Pipefitting Manufacturing 誉正阀门 www.valve-yz.com

三片式快装球阀3PC Clamp end ball valve



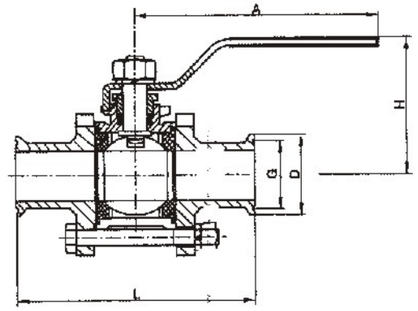

性能规范 Specifications

公称压力 Nominal pressure	PN	2.5,4.0,6.4	
强度试验压力 Strength testing pressure	PT	3.8,6.0,9.6	
低压密封试验压力 Strength testing pressure	0.6		
高压密封试验压力 Seal test preeure(high pressure)	3.0,4.8,7.6		
适用介质 Applicable medium	Q81F-(25~40~64)C,Q81F-(25~40~64)P,Q81F-(25~40~64)R		
	水、油品、气 Water、Oil、Gas	硝酸类 Nitric acid	醋酸类 Acetic acid
适用温度 Applicable temperature	-40~180℃		

材料列表 Materialliallist

零件名称 Description of parts	Q81F-25,40	Q81F-25,40	Q81F-25R,40R
阀体 Valve body	WCB	ZG1Cr18Ni9TiCF8	ZG1Cr18Ni12Mo2TiCF8M
球体 Ball	1Cr18Ni9Ti304	1Cr18Ni9Ti304	1Cr18Ni12Mo2T316
阀杆 Stem	1Cr18Ni9Ti304	1Cr18Ni9Ti304	1Cr18Ni12Mo2Ti316
密封圈 Seal ring	聚丙氟乙烯 Polytetrafluoroethlene		
填料 Packing	聚丙氟乙烯 Polytetrafluoroethlene		

尺寸列表 Dimension List

DN	G	D	L	H	A
15	1/2"	34	95	68	125
20	3/4"	50.5	105	70	125
25	1"	50.5	115	80	145
32	11/4"	50.5	125	84	145
40	11/2"	50.5	135	93	205
50	2"	64	150	100	205
65	21/2"	91	190	142	250
80	3"	106	220	155	250

Whatsapp:+852-59345951 E-mail: info@valve-yz.com Skype: blue.sky1

3PC高平台内螺纹球阀 3PC Thread ball valve with ISO5211 pad



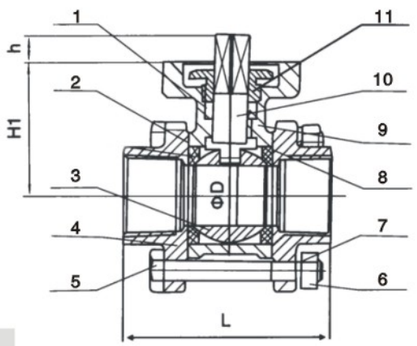

应用规范Application Norm

公称压力：1.6-6.4MPa
适用温度范围：-20～232℃～350℃
适用介质：水、油、气及某些腐蚀性液体(W、O、G)
承插焊标准：（SW）：GB12224・ANSIB16・25

Nominal pressuree:1.6-6.4MPa
Temperature Range:-20～232℃～350℃
Applying medium:water,oil,air and some CorrosiVe liquid(W、O、G)
Socket-welding stamdard:GB12224・ANSIB16・25

材料列表 Material list

ITEM	DESIGNATION	MATERIAL
1	阀杆填料 Stem packing	PTFE
2	阀座 Body seal	PTFE
3	球 Ball	CF8M
4	阀盖 Bonnet	304
5	螺栓 Bolt	304
6	螺栓 Bolt	304
7	弹性垫圈 Spring washer	304
8	止推垫圈 Thrust washer	PTFE
9	阀体 Body	CF8，CF8M
10	阀杆 Stem	304
11	压盖 Gland	304

尺寸列表 Dimension list

SIZE / ITEM	1/4"	3/8"	1/2"	3/4"	1"	11/4"	11/2"	2"	21/2"	3"	4"
D	12.5	12.5	15	20	25	32	38	50	65	76	94
L	64	64	65.5	77.5	83.5	104.5	110.5	129	170	186	220
H	68.4	68.4	72	78	90	95	107	122	155	164	170
W	135	135	135	135	152	152	188	188	233	233	233

Whatsapp:+852-59345951 E-mail: info@valve-yz.com Skype: blue.sky1

YUzheng Valve Pipefitting Manufacturing 誉正阀门 www.valve-yz.com

不锈钢三通球阀Stainless steel 3way ball valve



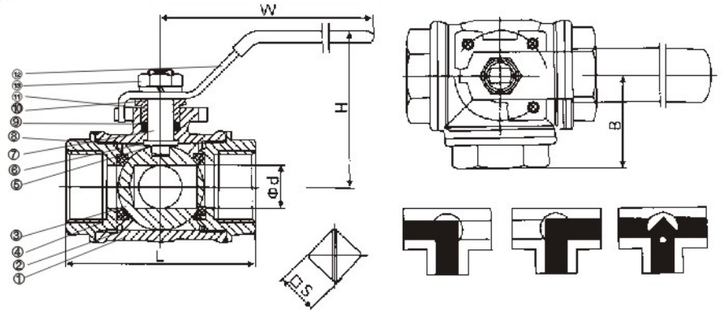

特点Feature

"L"型或"L"型结构
缩径
产品规格：1/4"~"2"
工作压力：1000PSI
螺纹端可按BSPT、NPT、DIN2999制造
ISO5211中平台
可选带锁手柄

"L"Type or"T"Type
Reduce Bore
Size：1/4"-2"
Working Pressure：1000PSI
Threaded end：BSPT、NPT、DIN2999
ISO5211 mouning pad
(Optional)Locking Device Handle

材料列表 Material list

NO	部件名称	Part Name	材料Material
1	阀体	Body	CF8M
2	阀盖	Bonnet	CF8M
3	阀座	Seat	PTFE
4	球	Ball	SS316
5	密封圈	Seal Ring	PTFE
6	阀杆密封	Stem Seal	PTFE
7	阀杆	Stem	SS316
8	防静电装置	Anti-Static Device	SS304
9	阀杆填料	Stem Packing	PTFE
10	填料压盖	Packing Gland	SS304
11	弹性垫圈	Spri ng Washer	SS304
12	手柄	Handle	SS304
13	螺母	Stem Nut	SS304

尺寸列表 Dimension list

NPS	ϕd	L	H	W	B	ISO5211	□S
1/4	4.2	64	32	85	32	F2	(7)
3/8	6	64	32	95	32	F2	(7)
1/2	10	68	34	108	34	F3	(9)
3/4	15	78	60	115	39	F3	(9)
1	18	86	60	135	43	F4	(9)
1-1/4	25	111	76	150	55.5	F4	(11)
1-2/2	32	126	85	175	63	F5	(11)
2	40	143	95	190	71.5	F5	(11)

Whatsapp:+852-59345951 E-mail: info@valve-yz.com Skype: blue.sky1

三片式不锈钢气动球阀3PC stainless steel pneumatic ball valve

规格Standard

设计制造：参数规范 ASME B16.34
检验测试：参照规格 API 598
DESIGN：ASME B16.34
TESTING：API598

连接端形式：牙口，NPT或BSPT/套连接对焊连接
ENDCONNECTION：THREADED(NPT,BSP, BSPT)/SOCKET WELD/BUTT WELD

温度范围:-29℃~230℃
TEMPERATURERATING：-29℃~+230℃

驱动方式:电动/气动
DRIVING:ELECTRIC/PNEUMATIC



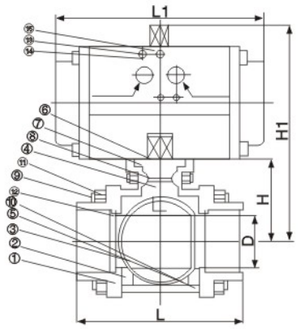

1000WOG

以R15(Vc值1.3)比例，作为参考
固有流量特性

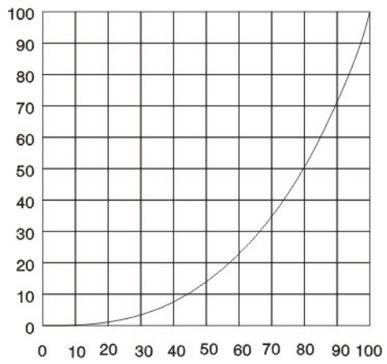

材料表Material list

NO	PART NAME 零件名称		SPECIFICATION 规格	
1	Body	本体	A351-CF8M	A351-CF8
2	Cap	阀盖	A351-CF8M	A351-CF8
3	Ball	球	A351-CF8M	A351-CF8
4	Stem	阀杆	SUS316	SUS304
5	Seat	阀座	PTFE/RTFE/TFM1600PEEK	
6	Gasket	线圈	PTFE	
7	Packing	填料	REINFORCED/FTFE	
8	O Ring	O型圈	VTTON	
9	Disc spring	碟簧	SUS301	
10	Bolt	连接螺栓	ASTM A193-E8	
11	Nut	螺帽	ASTM A194-8	
12	Bolt washer	垫片	SUS304	
13	Bolt	连接螺栓	ASTM A193-E8	
14	Bolt nut	螺母	ASTM A194-8	
15	Pneumatic	气动执行器	-	

SIZE	D	L	L1	H	H1	ISO5211
R1/2"	R15	75	137	36.5	125.5	F03/F04
1/2"	16.0	75	137	36.5	125.5	F03/F04
3/4"	20.0	80	137	39.5	128.5	F03/F04
1"	25.0	90	137	47.5	136.5	F03/F04
1-1/4"	32.0	110	137	53.5	142.0	F03/F04
1-1/2"	38.1	120	154	61.5	166.5	F05
2"	50.8	140	154	70.5	175.5	F06

Whatsapp:+852-59345951 E-mail: info@valve-yz.com Skype: blue.sky1

YUzheng Valve Pipefitting Manufacturing 誉正阀门 www.valve-yz.com

气动、电动、法兰球阀Pneumatic/Electric actuator/Flanged ball valve



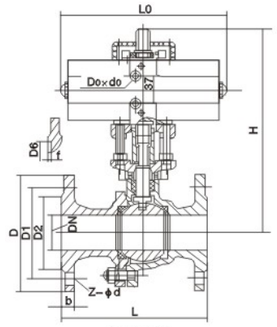

气动球阀



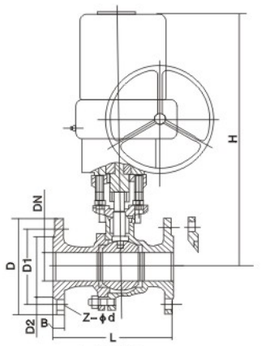

电动球阀

主要性能规范Main property and specifiecation

型号 Type	公称压力 PN/MPa Nominalpressure	试验压力/MPaTest pressure			适用温度℃ Applicable temperature	适用介质 Applicable medium
		壳体 Shell	液体密封 Liquid seal	气体密封 Gas seal		
Q641F-25	2.5	3.75	2.75	0.6	≤150	水、蒸汽、油品等 Water steam coalgas oil
Q641F-25P						弱腐蚀性材质 Weak corrosivity material
Q641F-25R						腐蚀性介质 Etccorrosive medium

主要零件材料 Main parts material

型号 Type	零件名称 Part name			
	阀体 Body	球体、阀杆 Ball stem	密封圈 Seal ring	填料 Packing
Q641F-25	碳素钢铸件或锻件 Carbon steel casting	2GrL3	增强聚四氟乙烯 R PTFE	聚四氟乙烯 PTFE
Q641F-25P	铬镍钛不锈钢铸件或锻件 Cr Ni Tistainless steel casting	铬镍钛不锈钢 Cr Ni Tistainless steel		
Q641F-25R	铬镍钼钛不锈钢铸件或锻件 Cr Ni Mo Tistainless steel casting	铬镍钼钛不锈钢 Cr Ni Mo Tistainless steel		

主要尺寸及数量 Main dimensions

公称通径DN/mm Nominal diameter	尺寸/mmDimensions							气动装置型号 Pneumatic actuator type	电动装置型号 Elecric actuator type
	L	D	D1	D2	b	Z-φd	H		
15	130	95	65	45	16	4-φ14	225	QGSY50	CH05
20	140	105	75	55	16	4-φ14	227	QGSY50	CH05
25	150	115	85	65	16	4-φ14	233	QGSY50	CH05
32	165	135	100	78	18	4-φ18	259	QGSY65	CH10
40	180	145	110	85	18	4-φ18	267	QGSY65	CH10
50	200	160	125	100	20	4-φ18	278	QGSY65	CH10
65	220	180	145	120	22	8-φ18	363	QGSY80	CH10
80	250	195	160	135	22	8-φ18	383	QGSY105	CH20
100	280	230	190	160	24	8-φ23	552	QGSY105	CH20
125	320	270	220	188	28	8-φ25	576	QGSY125	CH40
150	360	300	250	218	30	8-φ25	604	QGSY160	CH60

Whatsapp:+852-59345951 E-mail: info@valve-yz.com Skype: blue.sky1