立式止回阀 Vertical cheek valve



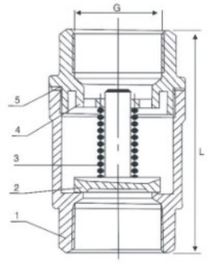

性能规范

>制造与验收按GB/T12224-1989的规定
>其它技术要求按JB2887-81的规定
>阀门检查和试验GB/T13927-92的规定

Specifications

>Making and confirming according to the regulation of GB/T12224-1989;
>Other technical requirements,according to the regulation of JB2887-81;
>The valve is checked and tested according to the regulation of GB/T13927-92.

No	部件名称 Part Name	H14/15-(16-64)C	H14/15F-(16-64)P	H14/15F-(16-64)R
1	阀体 Body	WCB	ZG1Cr18Ni9TI CF8	ZG1Cr18Ni12Mo2Ti CF8
2	阀盖 Bonnet	WCB	ZG1Cr18Ni9TI CF8	ZG1Cr18Ni9Ti CF8
3	阀瓣 Disc	2G1Cr18Ni9Ti	ZG1Cr18Ni9TI CF8	ZG1Cr18Ni9Ti CF8
4	密封圈 Seal gasket	304、316、PTFE		
5	填料 Packing	聚四氟乙烯Polytetraflurethylene(PTFE)		

主要连接尺寸 Main dimensions

公称通径DN	G	L
15	1/2"	68
20	3/4"	78
25	1"	89
32	1-1/4"	100
40	1-1/2"	106
50	2"	121

Whatsapp:+852-59345951 E-mail: info@valve-yz.com Skype: blue.sky1

Whatsapp:+852-59345951 E-mail: info@valve-yz.com Skype: blue.sky1

不锈钢内螺纹止回阀 Stainless steel thread swing check valve



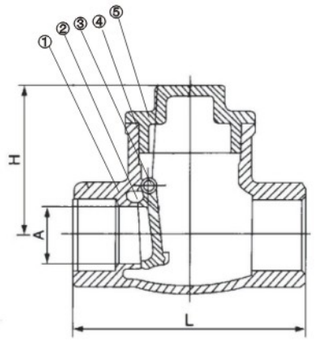

应用规范Application Norm

公称压力：2.5MPa
适用温度范围：-20～232℃～350℃
适用介质：水、油、气及某些腐蚀性液体(W、O、G)
螺纹类型：G・NPT.BSPT.BSP.DIN259/2999

Nominal pressuree:2.5MPa
Temperature Range:-20～232℃～350℃
Applying medium:water,oil,air and some Corrosive liquid(W、O、G)
Thread type:G・NPT. BSPT.BSP.DIN259/2999

主要零件材料Main parts and materials

序号Number	零件名称 Part name	材质 Material
1	阀体ValVe Body	不锈钢Stainless steel CF8M/CF8
2	阀瓣Valve Disc	不锈钢Stainless steel CF8M/CF8
3	摇杆插销Rocker socket	不锈钢Stainless steel SS31 6/304
4	密封圈 Seal Ring	不锈钢Stainless steel CF8M/CF8
5	阀盖Valve Cap	不锈钢Stainless steel SS316/304

主要连接尺寸及重量 Main dimensions and weights

单位Unit：mm

NPS	d	L	H
1/4"	6	58	36
3/8"	10	58	36
1/2"	15	66	40
3/4"	20	80	54
1"	25	90	59
1-1/4"	32	105	62.5
1-1/4"	38	120	73
2"	50	140	85

Whatsapp:+852-59345951 E-mail: info@valve-yz.com Skype: blue.sky1

YUzheng Valve Pipefitting Manufacturing 誉正阀门 www.valve-yz.com

H71W对夹式止回阀 H71W Disc Type Wafer Check Valve



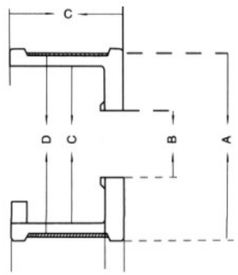

本阀门由于阀体、阀瓣、阀盖等组成。阀瓣在液压的作用下打开。并限制在阀盖的凸台上，流体经阀瓣外边通过。当出口压力大于进口压力时，阀瓣就在液压力和弹簧力的作用下关闭制止了流体的返流。

This valve as a result of composition and so on valve body, valve petal, valve cover. The valve petal opens under the hydraulic pressure function, and limits on valve cover raised, the fluid passes after the valve petal outside. When the outlet pressure is bigger than the inlet pressure, the valve petal on closed in the hydraulic pressure and under thespring strength function stops the fluid to return flows.

性能参数 Function parameter

公称压力Pg(Kgf/cm²) Nominal pressure		40	工作温度℃ Operating temperature	
试验压力Ps(Kgf/cm²) Test pressure	密封 Seal	40		常温
	强度 Intensity	60		
工作压力Ps(Kgf/cm²) Working pressure		40		≤250
适用介质 suitable the medium		硝酸等腐蚀性介质 Corrosiveness and so on nitric acid lies between stores		

主要尺寸 Main Dimensions

口径Caliber	A	B	C
15	52	15	31
20	60	20	31
25	70	25	31
32	80	32	34
40	90	40	35
50	105	50	40
65	127	65	50
80	140	80	60
100	160	100	75
125	190	125	83
150	220	150	98
200	280	200	110
250	340	250	
300	400	300	
350	455	350	
400	510	400	

Whatsapp:+852-59345951 E-mail: info@valve-yz.com Skype: blue.sky1

Y型内螺纹过滤器Y Type thread strainer



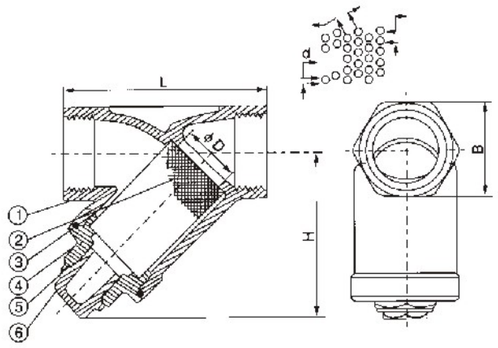

应用规范Application Norm

公称压力：600~800PSI
适用温度范围：-20~232℃
适用介质：水、油、气及某些腐蚀性液体(W、O、G)
螺纹类型：G·NPT.BSPT.BSP.DIN259/2999

Nominal pressuree:600~800PSI
Temperature Range:-20~232℃
Applying medium:water,oil,air and some Corrosive liquid(W、O、G)
Thread type:G·NPT. BSPT.BSP.DIN259/2999

主要零件材料Main parts and materials

序号 Number	零件名称 Part name	材质 Material
1	阀体Valve Body	不锈钢Stainless steel CF8/CF8M
2	滤网Screen	不锈钢Stainless steel Ss304
3	垫片Gasket	聚四氟乙烯PTFE
4	阀盖Valve Cap	不锈钢Stainless steel CF8/CF8M
5	垫片Gasket	聚四氟乙烯PTFE
6	逆止盖Check cap	不锈钢Stainless steel CF8/CF8M

主要连接尺寸及重量 Main dimensions and weights

单位Unit：mm

SIZE	1¹/4"	3/8"	1/2"	3/4"	1"	11/4"	11/2"	2"
D	10	12	15	20	25	32	40	50
B	24	24	26	33	41	49	56	69
H	51	51	51	60	72	77	87	103
L	65	65	65	80	90	105	120	140
重量WT(G)	290	290	300	500	750	1000	1300	

Whatsapp:+852-59345951 E-mail: info@valve-yz.com Skype: blue.sky1

YUzheng Valve Pipefitting Manufacturing 誉正阀门 www.valve-yz.com

不锈钢内螺纹闸阀Stainless steel thread gate valve



Z11W-25P

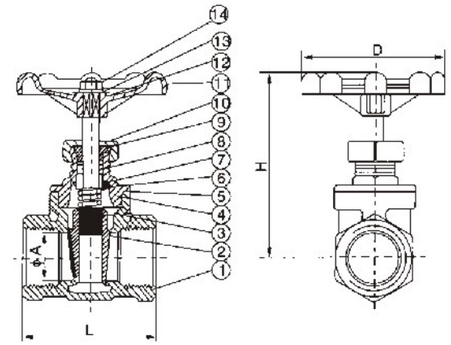

应用规范Application Norm

公称压力：2.5MPa
适用温度范围：-20~232℃~350℃
适用介质：水、油、气及某些腐蚀性液体(W、O、G)
螺纹类型：G·NPT.BSPT.BSP.DIN259/2999

Nominal pressuree:2.5MPa
Temperature Range:-20~232℃~350℃
Applying medium:water,oil,air and some CorrosiVe liquid(W、O、G)
Th read type:G·NPT. BSPT.BSP.DIN259/2999

主要零件材料Main parts and materials

序号Number	零件名称 Part name	材质 Material
1	阀体Valve Body	不锈钢Stainless steel CF8M/CF8
2	闸板Disc	不锈钢Stainless steel CF8M/CF8
3	阀杆Valve Stem	不锈钢Stainless steel SS316/304
4	阀盖Valve Cap	不锈钢Stainless steel CF8M/CF8
5	填料Packing	聚四氟乙烯PTFE
6	止推垫片Stop ring	不锈钢Stainless steel SS304
7	阀杆架Valve stem holder	不锈钢Stainless steel SS316/304
8	填料Packing	聚四氟乙烯PTFE
9	螺母Nut	不锈钢Stainless steel SS304
10	填料压盖螺母Gland nut	不锈钢Stainless steel SS3 16/304
11	手轮Hand wheel	铝合金Mico steel
12	铭牌Name plate	铝Aluminum
13	手轮垫片Hand wheel washer	不锈钢Stainless steel SS304
14	手轮螺母Hand wheel nut	不锈钢Stainless steel SS304

主要连接尺寸 Main dimensions

单位Unit：mm

SIZE	1/2"	3/4"	1"	11/4"	11/2"	2"
A	15	20	25	32	38	50
H	90	97	108	120	146	163
L	55	60	65	75	85	95
D	70	70	80	80	90	100

Whatsapp:+852-59345951 E-mail: info@valve-yz.com Skype: blue.sky1

内螺纹截止阀Thread globe valve



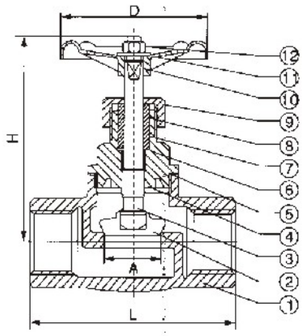

美式American style
J11w-16 $\frac{P}{R}$ 200WOG

应用规范 Application Norm

公称压力：2.5Pa
适用温度范围：-20~232℃~350℃
适用介质：水、油、气及某些腐蚀性液体（W、O、G）
螺纹类型：G·NPT.BSPT.BSP.DIN259/2999

Normal pressure:2.5MPa
Temperature Range:-20~232℃~350℃
Applying medium:water,oil,air and some Corrosive liquid（W、O、G）
Thread type:G·NPT.BSPT.BSP.DIN259/2999

主要零件材料Main parts and materials

序号Number	零件名称 Part name	材质 Material
1	阀体 Valve Body	不锈钢 Stainless steel CF8/CF8M
2	阀瓣 Valve Disc	不锈钢 Stainless steel SS304/316
3	阀杆 Valve Stem	不锈钢 Stainless steel SS316
4	阀盖 Valve Cap	不锈钢 Stainless steel CF8/CF8M
5	密封垫 Joint Gasket	聚四氟乙烯PTFE
6	平垫washer	不锈钢 Stainless steel SS304/316
7	填料 Packing	聚四氟乙烯PTFE
8	压环 Clamping ring	不锈钢 Stainless steel SS304/316
9	压盖 Gland	不锈钢 Stainless steel CF8/CF8M
10	手轮 Hand wheel	HT(C.R)
11	铭牌Name plate	ALUMINUM ALLOY
12	螺母 Nut	不锈钢 Stainless steel SS304

主要连接尺寸及重量 Main dimensions and weights 单位：mm Unit:mm

SIZE	1/4″	3/8″	1/2″	3/4″	1″	11/4″	11/2″	2″
A	10	12	15	20	25	32	40	50
D	70	70	70	70	80	90	90	100
L	65	65	65	80	90	105	120	140
H	85	85	85	95	105	125	135	155
重量WT（G）	340	340	350	550	870	136	1860	2670

Whatsapp:+852-59345951 E-mail: info@valve-yz.com Skype: blue.sky1

YUzheng Valve Pipefitting Manufacturing 誉正阀门 www.valve-yz.com

螺纹式气动角座阀Thread pneumatic angle seat valve

选取Select

控制功能：常开
PPS执行机构外壳适用于环境温度+5℃～+130℃
无复位弹簧 双作用执行机构
三夹式连接
独立可调行程极限，适于高低流量
手动应急开关
function:normally open
pps body actuator suitable for temperature of:+5℃~+130℃
Bon-return spring double acting actuator
3 clamp connection
Adjustable traveling postionfor high or low flow rate
manual switch for urgent



接口Size (英寸)(in)	内孔 inside bore	KV值 KV value	最大工作压力 Max working pressure(mpa)	要求最小控制压力 Min.required control pressure(bar)	执行机构尺寸 Actuator size(Φmm)	流向 Flow direction	控制功能 Control fuction
G3/8"	13	3.7	0～16	4～7	40	阀座上方 On upper seat	
G1/2"	15	4.2	0～16	4～7	50	阀座上方 On upper seat	
G3/4"	20	8.	0～16	4～7	50	阀座上方 On upper seat	
G 1"	25	19	0～16	4～7	63	阀座上方 On upper seat	
G1 1/4"	32	27.5	0～16	4～7	63	阀座上方 On upper seat	
G1 1/2"	40	42	0～16	4～7	63	阀座上方 On upper seat	
G 2"	50	52	0～16	4～7	80	阀座上方 On upper seat	
G/2"	65	77	0～16	4～7	80	阀座上方 On upper seat	

订购气动阀门产品须知Notice for place order

1、请在订货时提供详细的口径、规格、交货地址、时间。
2、根据管道需要，决定选用往复式(二位开关式)或弹簧复位式(常闭或常开式)。
3、可选配控制附件：(1)单电控电磁阀(断电时常闭或常开)，(2)双电控电磁阀(开关式)，(3)阀位开关回讯器，(4)气源处理三联件。
特殊使用环境(易燃易爆场合)，可选防爆型。

1、please offer detail size,specification,delivery address and time
2、please slect returnable or spring-returnable for open and close
3、selectable spares:(1)solo-magnatic valve.(2)double maganetic valve (3)valve position feedbacker.(4)pneumatic equipment.may select anti-explosive type for special Condition

接口 size	内孔 Inside Bore	执行机构尺寸 Actuator size(Φmm)	A	B	C	E	F	H	A/F
G1/2"	15	50	85	173	13	64	44	137	27
G3/4"	20	50	95	178	14	64	44	145	32
G/1"	25	63	105	200	18	80	52	173	41
G11/4"	32	63	120	225	19	80	52	210	50
G11/2"	40	63	130	235	19	80	52	245	55
G /2"	50	80	150	290	23	101	61	301	70
G/2"	65	80	185	315	30	101	61	315	70

Whatsapp:+852-59345951 E-mail: info@valve-yz.com Skype: blue.sky1

快装式气动角座阀Clamp end pneumatic angle seat valve

外部先进导角座阀，溢流口与滑块间有自调节密封压盖，阀体角座结构可实现较大流量，特别是与普通截止相比时。

Self-adjusting stem seals.high flow rate.low fluid resistance.no water-hammer.



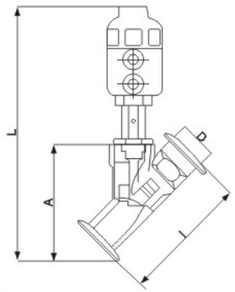

技术参数Specification:

压力范围：0-16bar
介质温度：-10℃-+180℃
环境温度：-10℃-+60℃
阀体材料：不锈钢
密封材料：聚四氟乙烯
执行机构外壳：聚酰胺
控制气体：中性气体，空气

Control type:0-16bar
Flow temperature:-10℃-+180℃
Ambient temperature:-10℃-+60℃
Body material:stainless steel
Seat:teflon(PTFE)
Actuator:Aluminium alloy
Actuator pneumatic:Air or others

选取Select

PPS执行机构外壳造用于环境温度+5℃~+130℃
无复位弹簧 双作用执机构
三夹式连接
电子式位置反馈
立可调行程极限，适于高低流量
手动应急开关
先导阀适用的Namur适配器

PPS body actuator suitable for trmp of+5℃~+130℃
Non-return spring double acting actuator
3 clamp connection
Electric position feedback
Ajustable traveling postion for high or low flow rate
Manual switch for urgent
valve suitable for Namur equipment

外形尺寸External dimensions

接口 Size	内孔 Inside Bore	外形连接尺寸Outside dimension				最大工作压力 Max.working pressure	气源压力 Pneumatic Pressure	执行器规格 Actuator spec
		A	D	B	H			
G1/2	15	108	34	98	160	1.6	0.4-0.7	ϕ50
G3/2	20	118	50.5	108	170			ϕ63
G1	25	127	50.5	117	195			ϕ63
G11/4	32	148	50.5	138	255			ϕ80
G11/2	40	159	50.5	149	304			ϕ80
G2	50	191	64	181	380			ϕ100
G21/2								ϕ100
G3								

参数Specification

接口Size (英寸)(in)	内孔 inside bore	KV值 KV value (m^3/h)	最大工作压力 Max working pressure(bar)		要求最小控制压力 Min.required control pressure(bar)	执行机构尺寸 Actuator size(Φmm)		流向 Flow direction	控制功能 Control fuction
			螺纹thread	焊接weld		螺纹thread	焊接weld		
G3/8	13.0	3.7	15.0	–	4.0	40	–	阀座下方 On downer seat	
G1/2	13.0	4.2	16.0	16.0	3.9	50	50	阀座下方 On downer seat	
G3/4	20.0	8.0	11.0	11.0	3.9	50	50	阀座下方 On downer seat	
G1	25.0	19.0	11.0	11.0	4.2	63	63	阀座下方 On downer seat	
G11/2	32.0	27.5	15.0	15.0	5.0	80	80	阀座下方 On downer seat	
G11/2	40.0	42.0	12.5	10.0	4.4	100	80	阀座下方 On downer seat	
G2	50.0	55.0	10.0	7.2	3.2	125	100	阀座下方 On downer seat	
G21/2	65.0	90.0	5.2	–	3.2	125	–	阀座下方 On downer seat	

Whatsapp:+852-59345951 E-mail: info@valve-yz.com Skype: blue.sky1

YUzheng Valve Pipefitting Manufacturing 誉正阀门 www.valve-yz.com

法兰式气动角座阀Flanged pneumatic angle seat valve

外部先进导角座阀，溢流口与滑块间有自调节密封压盖，阀体角座结构可实现较大流量，特别是与普通截止相比时。

Self-adjusting stem seals.high flow rate. low fluid resistance.no water-hammer.



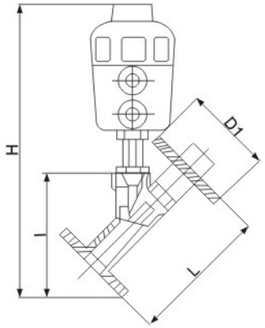

技术参数Specification:

压力范围：0-16bar
介质温度：-10℃-+180℃
环境温度：-10℃-+60℃
阀体材料：不锈钢
密封材料：聚四氟乙烯
执行机构外壳：聚酰胺
控制气体：中性气体，空气

Control type:0-16bar
Flow temperature:-10℃-+180℃
Ambient temperature:-10℃-+60℃
Body material:stainless steel
Seat:teflon(PTFE)
Actuator:Aluminium alloy
Actuator pneumatic:Air or others

选取Select

PPS执行机构外壳造用于环境温度+50℃~+130℃
无复位弹簧 双作用执机构
三夹式连接
电子式位置反馈
立可调行程极限，适于高低流量
手动应急开关
先导阀适用的Namur适配器

PPS body actuator suitable for temp.of +50℃~+130℃
Non-return spring double acting actuator
3 clamp connection
Electric position feedback
Ajustable traveling postion for high or low flow rate
Manual switch for urgent
valve suitable for Namur equipment

外形尺寸External dimensions

接口 size	内孔 Inside Bore	外形连接尺寸Outside dimension				最大工作压力 Max.working pressure	气源压力 Pneumatic pressure	执行器规格 Actuator spec
		A	D	B	H			
G1/2	15	130	110	135	150	1.6	0.4-0.7	ϕ50
G3/2	20	130	115	135	150			ϕ50
G1	25	140	125	135	185			ϕ63
G11/4	32	150	135	.135	255			ϕ80
G11/2	40	180	145	170	340			ϕ80
G2	50	195	160	180	380			ϕ80
G21/2	55	256	180	190	.450			ϕ100
G3	80	270	195	230	480			ϕ125

参数Specification

接口Size (英寸)(in)	内孔 inside bore	KV值 KV value	最大工作压力 Max working pressure(bar)		要求最小控制压力 Min.required control pressure(bar)	执行机构尺寸 Actuator size(Φmm)		流向 Flow direction	控制功能 Control fuction
			螺纹thread	焊接weld		螺纹thread	焊接weld		
G3/8	10.0	3.7	15.0	–	4.0	40	–	阀座上方 On upper seat	
G1/2	15.0	4.2	16.0	16.0	3.9	50	50	阀座上方 On upper seat	
G3/4	20.0	8.0	11.0	11.0	3.9	50	50	阀座上方 On upper seat	
G1	25.0	19.0	11.0	11.0	4.2	63	63	阀座上方 On upper seat	
G11/2	32.0	27.5	15.0	15.0	5.0	63	80	阀座上方 On upper seat	
G11/2	40.0	42.0	12.5	10.0	4.4	80	80	阀座上方 On upper seat	
G2	50.0	55.0	10.0	7.2	3.2	80	80	阀座上方 On upper seat	
G21/2	65.0	90.0	5.2	–	3.2	100	–	阀座上方 On upper seat	

Whatsapp:+852-59345951 E-mail: info@valve-yz.com Skype: blue.sky1

全不锈钢螺纹气动角座阀 Stainless steel thread pneumatic angle seat valve



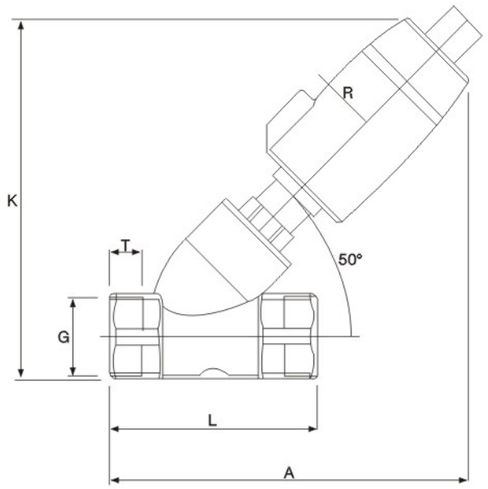

技术参数Technical specification

阀门功能：常闭·常开
工作压力：3kgf/cm2
控制压力：4-6kgf/Cm2
介质温度：-10℃-+80℃
环境温度：-10℃-+60℃
适用介质：中性气体和液体
气控接口：G1/8

阀体材料：不锈 钢/青铜
密封材料：聚四氟乙烯/氟橡胶
阀杆材料：不锈钢

Valve Function：Normally Close · Normally open
Workinl pressure：3kgf/cm²
Control pressu re：4-6kgf/CM²
Medium temperature：-10℃-+80℃
Environment temperature:-10℃-+60℃
Applied medium：neutral gaS and liquid
Pneumat-ic ioint：G1/8

Valve body material:SS316/Bronze
Seal material:PTFE/FPM
Valve stem material:S.S316

尺寸 Dimension

规格 Size	A	G	K	L	R	T	订货号 Order number
DN15	113	ZGL/2"	120	70	27	15	BTB714003-15
DN20	120	ZG3/4"	130	80	27	17	BTB714003-20
DN25	135	ZGL"	140	90	27	17	BTB714003-25
DN32	180	ZGL1-4"	180	115	35	20	BTB714005-32
DN40	180	ZGL1-2"	182	115	35	16	BTB714005-40
DN50	190	ZG2"	200	138	35	20	BTB714005-50

Whatsapp:+852-59345951 E-mail: info@valve-yz.com Skype: blue.sky1



Whatsapp:+852-59345951 E-mail: info@valve-yz.com Skype: blue.sky1