AT系列新型阀门气动执行器

AT新型齿轮齿条式气动执行器由欧德隆公司综合了国内外最新技术，通过CAD三维模型创新优化设计，外形美观紧凑、现代化的造型；并采用实用新型材料、新工艺，使产品的质量、性能更加可靠；多规格选型更经济实惠；产品全面符合最新国际标准技术规范，满足现在和未来的需求。

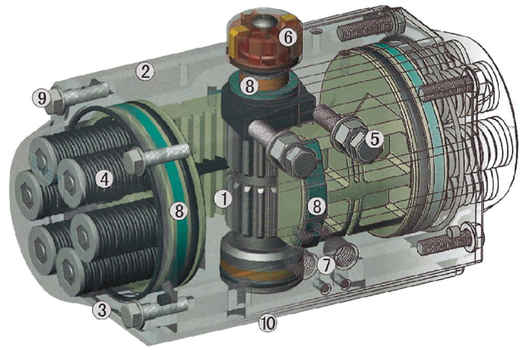

① 齿轮齿条双活塞对称结构设计，动作快速平稳，精度高，输出功率大，通过简单的改变活塞装配位置可得到反方向旋转。

② 挤压的优质铝合金缸体，经精密加工的内孔和外部表面进行硬质阳极氧化处理(特殊情况下阳极氧化+特氟隆涂层)，使用寿命更长，摩擦系数低。

③ 一体式设计，所有的双作用和单作用执行器型号，都具有相同的缸体和端盖，很方便通过加装弹簧或拆除弹簧来改变作用方式。

④ 组合式预符合安全弹簧组，不论在装配过程或使用现场中，都能方便而安全的安装或增减弹簧数量。

⑤ 外部侧面两个单独调节螺钉对于已安装在阀门上的执行器更是精确方便，调节阀开和阀关位置，如需全行程调节时则另外在两个端盖处配置较长调节螺钉。

⑥ 多功能位置指示器，现场可视化指示，符合VID/VIE3845、NAMUR标准槽，能安装并输出所有附件，如限位开关盒、电气定位器、位置传感器(倍加福、图尔克)。

⑦ 气源接口符合NAMUR标准，可直接安装NAMUR标准电磁阀。

⑧ 齿条背面的复合材料轴瓦和活塞导向环以及输出轴的轴承等为防止金属对金属的摩擦，并且增加润滑，使其低摩擦、长寿命。

⑨ 所有的紧固件均采用不锈钢材料，长期抗腐蚀。

⑩ 连接部分符合全新国际标准规范ISO5211，DIN3337(F03–F25)使产品安装具有互换性、通用性。

型号编制

AT – 100D – 090 – F10 – P22 – 10 – HT – A

- A — 防腐等级 — 防腐等级A、B
- HT — 操作温度 — ST=标准操作温度丁晴橡胶O型圈–20℃ to+80℃ / HT=高温氟橡胶O型圈–15℃ to+150℃ / LT=低温硅橡胶O型圈–40℃ to+80℃
- 10 — 弹簧数量 — 两端弹簧数量5–12只
- P22 — 输出轴孔尺寸 — LD=⬢平行斜角输出孔 / H =⬮平行对边输出孔 / W =⬣二个键槽输出孔
- F10 — 连接尺寸 — 符合国际标准ISO5211(F03–F25)
- 090 — 旋转角度 — 90° /120° /180° 旋转角度 / 0° –90° /0–180° 全行程机械调节 / 3P–0° –45° –90° /3P–0° –90° –180° 三位置
- 100D — 规格大小 作用方式 — 执行器规格050–330 / 作用形式D=双作用，S=单作用（弹簧复位式）
- AT — 执行器型号 — 气动执行器

New Pneumatic Valve Actuator Of Series AT

AT the new rack and pinion pneumatic actuator int egrated company by the ODELO the latest technology at home and abroad, through the three–dimensional model of innovation and optimization of CAD design, beautiful shape compact, modern styling; and adopt practical new materials, new processes, product quality, more reliable;many more affordable selection of specifications; products fully comply with the latest technical specifications of international standards to meet current and future needs.

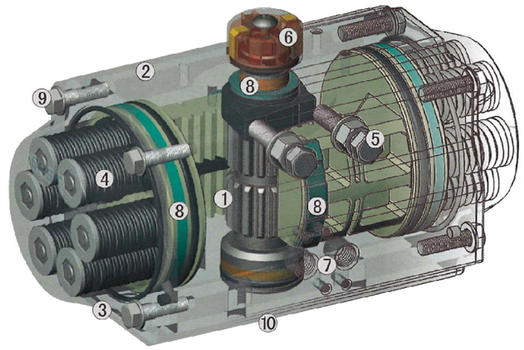

① dual piston rack and pinion design of symmetric structures, rapid and smooth movement, high precision, high output power, by simply changing the position of the piston assembly against the direction of rotation available.

② Extrusion of high–quality aluminum alloy cylinder block, by the precision machining of the inner hole and outer surface of hard anodized (anodic oxidation under special circumstances+teflon coating), longer life,low friction coefficient.

③ Integrated design, all the dual role and one role of the actuator models have the same cylinder and end caps,easily removed by installing a spring or spring to change the mode of action.

④ Combined pre–safe spring group, both in the assembly process or use on–site inboth convenient and safe to install or change the number of springs.

⑤ External side of two separate adjustment screw has been installed in the valve on the actuator is precisely to facilitate, control valve open and valve closed position, for a full stroke adjustment when the other two cover a longer adjustment screw office configuration.

⑥ Multi–position indicator, on–site visual instructions, consistent with VID/VIE3845, NAMUR standard slot, the output can be installed and all the accessories, such as limit switch box,electric positioner,position sensor(pepperl and fuchs,turck).

⑦ Interface complies with NAMUR standard gas source can be directly mounted NAMUR standard solenoid valve.

⑧ Rack on the back of the composite bearing and piston guide ring and the output shaft bearings to prevent metal on metal friction and increasing lubrication, so a low friction, long life.

⑨ All fasteners are stainless steel, long–term corrosion resistance.

⑩ Connecting part of the new international standar ds consistent with ISO5211, DIN3337(F03–F25) makes products with interchangeable, versatile.

Model preparation

AT – 100D – 090 – F10 – P22 – 10 – HT – A

- A — Corrosion–proof grade — Protection category A, B
- HT — Operating temperature — ST=standard operating temperature of nitrile rubber O–ring–20 ℃ to+80 ℃ / HT=high temperature Viton O–ring –15 ℃ to +150 ℃ / LT=low temperature silicone rubber O–ring –40 ℃ to +80 ℃
- 10 — Spring quantity — Both ends of the spring only the number of 5–12
- P22 — Pore size of the output shaft — LD = parallel angle output hole / H = hole parallel to the edge output / W = 2 output hole keyway
- F10 — Connection size — Compliance with international standards ISO5211 (F03–F25)
- 090 — Rotation angle — 90 ° / 120 ° / 180 ° rotation angle / 0 ° –90 ° / 0–180 ° full travel mechanical adjustment / 3P–0 ° –45 ° –90 ° / 3P–0 ° –90 ° –180 ° in three positions
- 100D — Specifications & size Mode of action — Actuator Specifications 050–330 / D = double acting the role of form, S = single effect (spring return)
- AT — Actuator model — Pneumatic actuator

零部件及材料、防腐

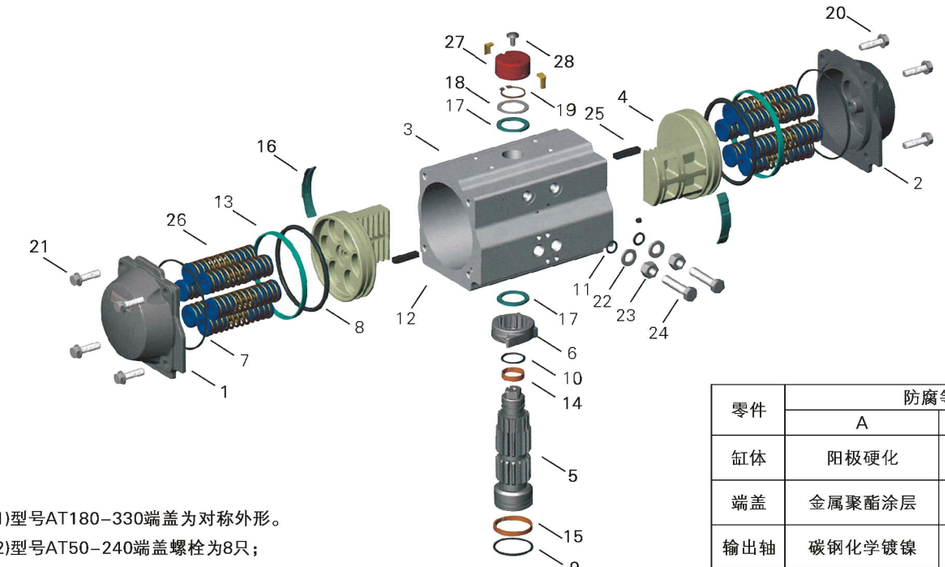

(1)型号AT180–330端盖为对称外形。

(2)型号AT50–240端盖螺栓为8只；

型号AT265–330端盖螺栓为12只。

*推荐维修用的零部件，包括在备件包中的零件。

零件	防腐等级	
	A	B
缸体	阳极硬化	特氟隆涂层 +阳极硬化
端盖	金属聚酯涂层	特氟隆涂层
输出轴	碳钢化学镀镍	碳钢化学镀镍 或不锈钢
使用 场合	一般场合	一般场合或 低浓度酸性环境

零件号	每台数量	零件名称	标准材料	选用材料
01	1(1)	左端盖	压铸铝合金	不锈钢
02	1(1)	右端盖	压铸铝合金	不锈钢
03	1	缸体	挤压铝合金	不锈钢
04	2	活塞	压铸铝合金	----
05	1	输出轴	碳钢	不锈钢
06	1	调节凸轮	不锈钢	----
07*	2	O型圈(端盖)	丁晴橡胶	氟或硅橡胶
08*	2	O型圈(活塞)	丁晴橡胶	氟或硅橡胶
09*	1	O型圈(输出轴底部)	丁晴橡胶	氟或硅橡胶
10*	1	O型圈(输出轴顶部)	丁晴橡胶	氟或硅橡胶
11*	2	O型圈(调节螺栓)	丁晴橡胶	氟或硅橡胶
12*	2	塞头(缸体)	丁晴橡胶	氟或硅橡胶
13*	2	轴承(活塞)	氟碳复合材料	----
14*	1	轴承(输出轴顶部)	尼龙46	----
15*	1	轴承(输出轴底部)	尼龙46	----
16*	1	导向轴承(活塞背面)	尼龙46	----
17*	2	推力轴承(输出轴)	尼龙46	----
18	2	垫片(输出轴)	尼龙46	----
19	1	弹性档圈	不锈钢	----
20	8/12/16(2)	端盖螺栓	不锈钢	----
21	8/12/16(2)	端盖垫片	不锈钢	----
22	2	垫片	不锈钢	----
23	2	螺帽	不锈钢	----
24	2	调节螺栓	不锈钢	----
25	2	导向块	尼龙66+30%FG	----
26	5–12	弹簧组件	合金弹簧钢	----
27	1	位置指示器	聚丙烯PP+30%GF	----
28	1	螺钉	不锈钢	----

Components, Material and Corrosion Protection

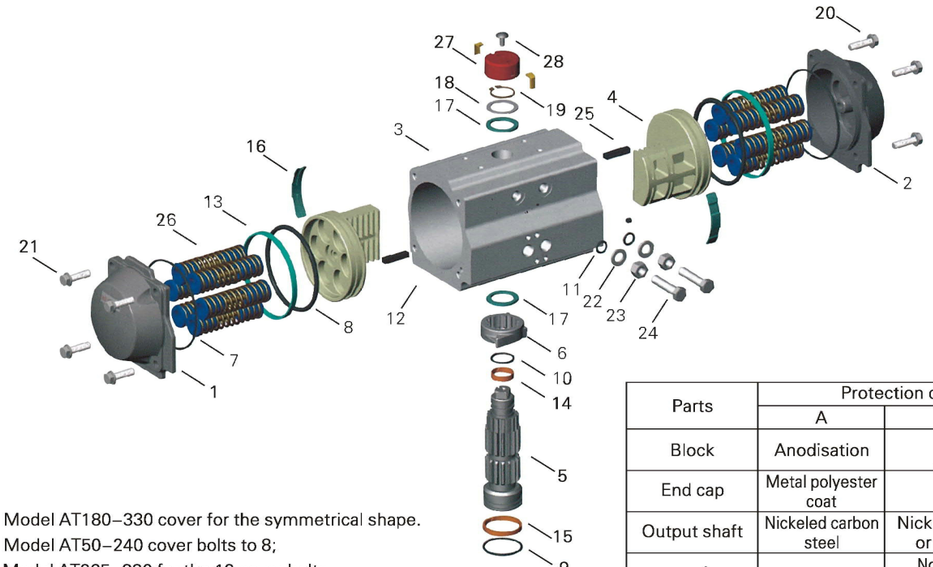

(1) Model AT180–330 cover for the symmetrical shape.

(2) Model AT50–240 cover bolts to 8;

Model AT265–330 for the 12 cover bolts.

* Recommended maintenance, spare parts, including spare parts package.

Parts	Protection category	
	A	B
Block	Anodisation	PTFE coat+ Anodisation
End cap	Metal polyester coat	PTFE coat
Output shaft	Nickeled carbon steel	Nickeled carbon steel or stainless steel
operating environment	Normal occasion	Normal occasion or environment with low concentration of the acidity

Part NO.	Number for Each type	Name of the parts	Standard Material	Materials Selected
01	1(1)	Left Cover	Aluminum Die Casting	Stainless steel
02	1(1)	Right Cover	Aluminum Die Casting	Stainless steel
03	1	Block	Aluminum extrusion	Stainless steel
04	2	Piston	Aluminum Die Casting	----
05	1	Output shaft	Carbon Steel	Stainless steel
06	1	Cam adjustment	Stainless steel	----
07*	2	O–ring (cover)	NBR	Fluorine or silicone rubber
08*	2	O–ring (Piston)	NBR	Fluorine or silicone rubber
09*	1	O–ring (output shaft bottom)	NBR	Fluorine or silicone rubber
10*	1	O–ring (output shaft at the top)	NBR	Fluorine or silicone rubber
11*	2	O–ring (adjusting screw)	NBR	Fluorine or silicone rubber
12*	2	Plug (Cylinder)	NBR	Fluorine or silicone rubber
13*	2	Bearing (Piston)	PVDF composites	----
14*	1	Bearing (output shaft at the top)	Nylon 46	----
15*	1	Bearing (output shaft bottom)	Nylon 46	----
16*	1	Guide bearings (piston back)	Nylon 46	----
17*	2	Thrust bearings (output shaft)	Nylon 46	----
18	2	Gasket (output shaft)	Nylon 46	----
19	1	Flexible ring file	Stainless steel	----
20	8/12/16(2)	Cover bolt	Stainless steel	----
21	8/12/16(2)	Cover Gasket	Stainless steel	----
22	2	Gasket	Stainless steel	----
23	2	Nut	Stainless steel	----
24	2	Adjustment bolt	Stainless steel	----
25	2	Block–oriented	Nylon 66 +30% FG	----
26	5–12	Spring Components	Alloy spring steel	----
27	1	Position indicator	Polypropylene PP +30% GF	----
28	1	Screw	Stainless steel	----

双作用式工作原理Principle of double-acting

当气源压力从气口(2)进入气缸两活塞之间中腔时， 使两活塞分离向气缸两端方向移动，两端气腔的空气通过气口(4)排出， 同时使两活塞齿条同步带动输出轴(齿轮)逆时针方向旋转。反之气源压力从气口(4)进入气缸两端气腔时，使两活塞向气缸中间方向移动，中间气腔的空气通过气口(2)排出，同时使两活塞齿条同步带动输出轴(齿轮)顺时针方向旋转。(如果把活塞相对反方向安装，输出轴变为反向旋转，即为双作用反转型)。

When the air supply pressure from the air intake (2) into the cylinder between the pistons in the chamber, so that the two separation of both ends of the cylinder piston moves, both ends of the air space of air through the air inlet (4) discharge, while allowing two simultaneous drive output shaft piston rack (gear) clockwise turn. Instead air pressure from the air inlet (4) into the cylinder at both ends of gas chamber, so the two piston cylindermoves to the middle of the middle air cavity of air through the air intake (2) discharge, with synchronization when the pistons driving the output shaft rack (gear) rotates clockwise. (such as results relative to the opposite direction to install the piston, the output shaft into the reverse rotation, that is, double for with the anti-transformation).

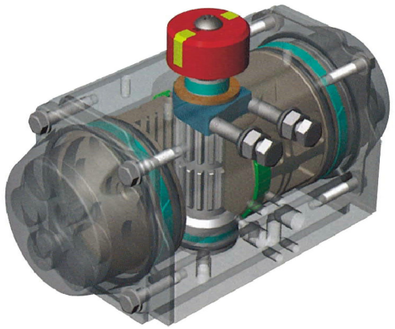

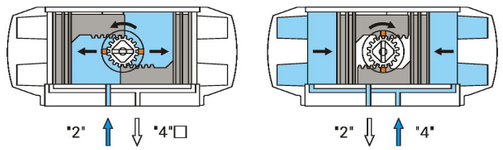

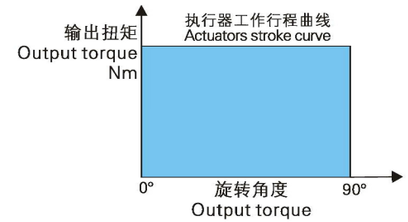

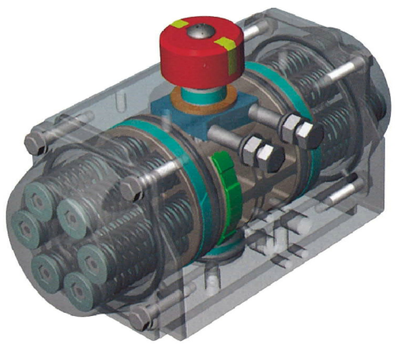

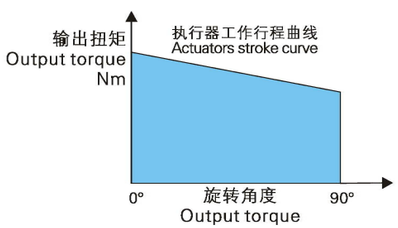

单作用式工作原理Principle of double-acting

当气源压力从气口(2)进入气缸两活塞之间中腔时，使两活塞分离向气缸两端方向移动，迫使两端的弹簧压缩，两端气腔的空气通过气口(4)排出，同时使两活塞齿条同步带动输出轴(齿轮)逆时针方向旋转。在气源压力经过电磁阀换向后，气缸的两活塞在弹簧的弹力下向中间方向移动，中间气腔的空气从气口 (2) 排出， 同时使两活塞齿条同步带动输出轴 (齿轮)顺时针方向旋转。(如果把活塞相对反方向安装，弹簧复位时输出轴变为反向旋转，即为单作用反转型)

When the air supply pressure from the air intake (2) into the cylinder between the pistons in the chamber, so that the two separation of both ends of the cylinder piston moves, forcing both ends of the spring compression, both ends gas chamber air through the air inlet (4) discharge, while simultaneously driving the pistons lose rack the axis (gear) counterclo ckwise rotation. After the gas supply pressu re valve for back, two-cylind er piston in the spring will move to the center under the middle air cavity air from the air intake (2) output, while allowing two simu ltaneous drive output shaft of the piston rack (teeth round) clockwise rotation. (If you installed the opposite direction relative to the piston, spring return into reverse when the output shaft rotation, that is, the role of anti-single-transformation)

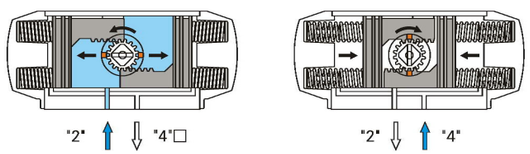

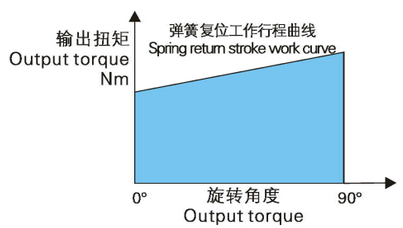

执行器选用

选用气动执行器时，在已确定阀门的扭矩上再增加安全值，水蒸气或非润滑的液体介质增加25%安全值；非润滑的浆料液体介质增加30%安全值；非润滑的干气介质增加40%安全值；非润滑用气体输送的颗粒粉料介质增加60%安全值；对于清洁、低摩擦的润滑介质增加20%安全值(上述安全值为本公司理论推荐，仅供参考)。

双作用式执行器选用示例

当控制一个需要扭矩200Nm的球阀，气源压力只有5bar，介质为非润滑的水蒸气，考虑到安全因素，增加25%安全值等于250Nm，按双作用输出扭矩表查找气源压力5bar，然后沿该列垂直查找等于或相近的扭矩数据，选277Nm，再沿该行向左查找其型号，选择AT125D型。

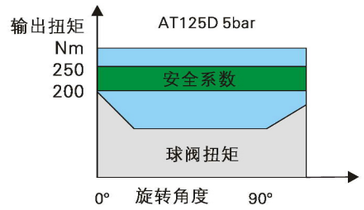

单作用式执行器选用示例

当控制一个需要扭矩100Nm的蝶阀，气源压力为4.5bar，介质为非润滑的干燥气体，考虑到安全因素，增加40%安全值等于140Nm，按单作用输出扭矩表查找弹簧复位终点得到相近扭矩148Nm，然后沿该行向左查找气源压力4.5bar的终点扭矩158Nm，必须考虑气源压力扭矩和弹簧复位扭矩相对力平衡，再沿该行向左查找其型号和弹簧数量，选择AT145S型、9只弹簧。

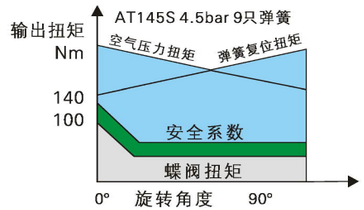

(A) 执行器的动作时间是下列条件测试：(1) 常温 (2) 90° 行程 (3) 电磁阀4mm口径，流量为Qn400L/min (4)管子内径8mm (5)中性干净空气 (6) 气源压力5.5bar (7) 执行器空载
注：在现场测试中一个或多个参数不同，动作时间会发生变化。
(B) 单作用重量为10根弹簧计算；需要增加或减少弹簧数量按每根弹簧重量来计算增加或减少每一台数量。

执行器有关数据

型 号	最大气源压力	旋转角度	操作温度(℃)	行程调节每1° 圈数	气缸直径 ϕ(mm)	气缸容量(L) 开向	气缸容量(L) 关向	开关时间(秒)(A) 开向	开关时间(秒)(A) 关向	重量(kg)(B) 每台	重量(kg)(B) 每根弹簧
AT050	干燥或润滑的洁净压缩空气 8 bar	90° ±4° 或全行程 0° ~90°	ST(标准) 丁晴橡胶O型圈 −20~+80 HT(高温) 氟橡胶O型圈 −15~+150 LT(低温) 硅橡胶O型圈 −40~+80	1/6	50	0.1	0.2	D0.2	D0.3	D1.1	----
								S0.3	S0.3	S1.2	0.01
AT063				1/6	63	0.2	0.3	D0.3	D0.3	D1.6	----
								S0.3	S0.4	S1.8	0.02
AT075				1/5	75	0.3	0.5	D0.3	D0.4	D2.8	----
								S0.4	S0.5	S3.2	0.03
AT088				1/5	88	0.5	0.8	D0.4	D0.5	D4.0	----
								S0.5	S0.6	S4.7	0.06
AT100				1/5	100	0.7	1.1	D0.5	D0.6	D5.9	----
								S0.7	S0.9	S6.7	0.07
AT115				1/5	115	1.2	1.8	D0.7	D0.8	D8.5	----
								S0.9	S1.1	S10.0	0.13
AT125				1/4	125	1.5	2.3	D0.9	D1.1	D10.7	----
								S1.2	S1.4	S12.5	0.16
AT145				1/4	145	2.4	3.8	D1.2	D1.4	D15.5	----
								S1.5	S1.8	S18.3	0.25
AT160				1/4	160	3.1	4.9	D1.5	D1.7	D19.5	----
								S1.8	S2.1	S23.3	0.36
AT180				1/4	180	4.3	6.9	D2.0	D2.2	D26.7	----
								S2.4	S2.8	S32.8	0.50
AT200				1/4	200	5.9	9.5	D2.7	D3.2	D35.6	----
								S3.5	S4.0	S43.6	0.62
AT240				1/4	240	10.0	15.2	D3.5	D4.0	D58.2	----
								S4.1	S4.6	S71.0	1.12
AT265				1/4	265	14.5	21.4	D4.0	D4.5	D78.8	----
								S4.5	S5.0	S96.5	1.56
AT330				1/4	330	25.0	40.0	D6.0	D7.0	D130	----
								S7.5	S8.5	S163	2.95

Actuator Selection

When pneumatic actuator used in the torque on the valve have been identified to increase the safety value,water vapor or liquid lubricating medium security value by 25%; non–lubricated slurry liquid medium to increase the security value of 30%; non–lubricated dry gas media to increase the security value of 40%;non–lubricating powder particles with gas delivery medium to increase the security value of 60%; for clean, low–friction lubricating medium to increase the security value of 20% (the theory of the security value of the company recommended,for reference only).

Use double–acting actuator example

When control of a need for torque 200Nm of ball valve, gas supply pressure is only 5bar, medium non–lubricated steam, taking into account the safety factor, increase the security value is equal to 25% of 250 Nm, the output torque of the table by double–acting pressure gas source to find 5bar, then along the vertical column is equal to or similar to find the torque data,select 277 Nm,and then along the line to the left to find the model, select AT125D type.

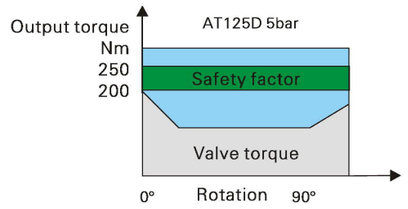

One example of the role of actuator selection

When control of a need for torque 100Nm of butterfly valves, air supply pressure 4.5bar, medium non–lubricated dry gas, taking into account the safety factor, increase the security value is equal to 40% of 140Nm, the role of the output torque by a single table to find the end spring return have similar torque 148Nm, and then along the line to the left to find the end of air supply pressure 4.5bar torque of 158Nm, must consider the supply pressure torque and spring return torque of the relative balance of power, and then along the line to the left to find the model and spring number, select AT145S type, nine springs.

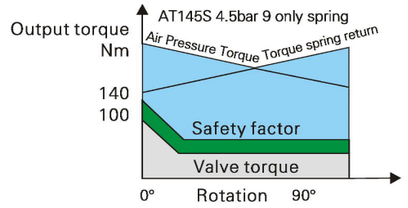

(A) movement time actuator test the following conditions: (1) at room temperature (2) 90 ° travel (3) 4mm diameter solenoid valves, flow Qn400L/min (4) tube diameter 8mm
(5) neutral clean air (6) air supply pressure 5.5bar (7) No–load actuators
Note: In the field test one or more parameters are different, the movement time to change.
(B) the role of the weight of a single calculation for the 10 spring; need to increase or decrease the quantity of springs per root weight to calculate the spring to increase or decrease each number.

Actuator information

型号 Model	Maximum air supply pressure	Rotation	Operating temperature (℃)	Stroke adjustment for each 1 ° turns	Cylinder diameter ϕ (mm)	Cylinder capacity (L) open to the commissioner to		Switching time (seconds)(A)open to the commissioner to		Weight (kg) (B) Each spring each	
AT050	Clean dry or lubricated compressed air 8 bar	90 ° ± 4 ° or full stroke 0 ° ~ 90 °	ST (standard) nitrile rubber O–ring –20~+80 HT (high temperature) Viton O–ring –15~+150 LT(low temperature) silicon rubber O–ring –40~+80	1/6	50	0.1	0.2	D0.2	D0.3	D1.1	----
								S0.3	S0.3	S1.2	0.01
AT063				1/6	63	0.2	0.3	D0.3	D0.3	D1.6	----
								S0.3	S0.4	S1.8	0.02
AT075				1/5	75	0.3	0.5	D0.3	D0.4	D2.8	----
								S0.4	S0.5	S3.2	0.03
AT088				1/5	88	0.5	0.8	D0.4	D0.5	D4.0	----
								S0.5	S0.6	S4.7	0.06
AT100				1/5	100	0.7	1.1	D0.5	D0.6	D5.9	----
								S0.7	S0.9	S6.7	0.07
AT115				1/5	115	1.2	1.8	D0.7	D0.8	D8.5	----
								S0.9	S1.1	S10.0	0.13
AT125				1/4	125	1.5	2.3	D0.9	D1.1	D10.7	----
								S1.2	S1.4	S12.5	0.16
AT145				1/4	145	2.4	3.8	D1.2	D1.4	D15.5	----
								S1.5	S1.8	S18.3	0.25
AT160				1/4	160	3.1	4.9	D1.5	D1.7	D19.5	----
								S1.8	S2.1	S23.3	0.36
AT180				1/4	180	4.3	6.9	D 2.0	D2.2	D26.7	----
								S2.4	S2.8	S32.8	0.50
AT200				1/4	200	5.9	9.5	D2.7	D3.2	D35.6	----
								S3.5	S4.0	S43.6	0.62
AT240				1/4	240	10.0	15.2	D3.5	D4.0	D58.2	----
								S4.1	S4.6	S71.0	1.12
AT265				1/4	265	14.5	21.4	D4.0	D4.5	D78.8	----
								S4.5	S5.0	S96.5	1.56
AT330				1/4	330	25.0	40.0	D6.0	D7.0	D130	----
								S7.5	S8.5	S163	2.95

双作用式输出扭矩 Double acting torque (Nm)

执行器型号 Actuator Model	2.5bar	3.0bar	3.5bar	4.0bar	4.5bar	5.0bar	5.5bar	6.0bar	7.0bar	8.0bar
AT032D	3.6	4.3	5	5.7	6.4	7.3	8	8.7	10	11.6
AT050D	8.3	10.0	11.6	13.3	15.0	16.6	18.3	19.9	23.3	26.6
AT063D	14.7	17.6	20.5	23.5	26.4	29.3	32.2	35.2	41.0	46.9
AT075D	29.1	34.9	40.7	46.5	52.3	58.2	64.0	69.8	81.4	93.0
AT088D	45.7	54.9	64.0	73.2	82.3	91.5	101	110	128	146
AT100D	66.5	79.7	93.0	106	120	133	146	160	186	213
AT115D	107	129	150	172	193	215	236	258	301	344
AT125D	138	166	194	221	249	277	304	332	387	443
AT145D	217	261	304	348	391	434	478	521	608	695
AT160D	283	340	397	453	510	567	623	680	793	907
AT180D	383	459	536	612	689	765	842	918	1071	1224
AT200D	531	638	744	850	956	1063	1169	1275	1488	1700
AT240D	935	1122	1309	1496	1683	1870	2057	2244	2618	2992
AT265D	1347	1617	1886	2156	2425	2695	2964	3234	3772	4311
AT330D	2350	2821	3291	3761	4231	4701	5171	5641	6581	7521

单作用式输出扭矩(弹簧复位)Single–action output torque (spring return)(Nm)

执行器型号 Actuator Model	弹簧数量 Spring quantity	空气压力扭矩 Air Pressure Torque																		弹簧复位扭矩 Torque spring return	
		2.5bar		3.0bar		3.5bar		4.0bar		4.5bar		5.0bar		5.5bar		6.0bar		7.0bar		8.0bar			
		0° 开始 Start	90° 结束 End	0° 开始 Start	90° 结束 End	0° 开始 Start	90° 结束 End	0° 开始 Start	90° 结束 End	0° 开始 Start	90° 结束 End	0° 开始 Start	90° 结束 End	0° 开始 Start	90° 结束 End	0° 开始 Start	90° 结束 End	0° 开始 Start	90° 结束 End	0° 开始 Start	90° 结束 End	0° 开始 Start	90° 结束 End
AT050S	05	4.9	3.4	6.6	5.1	8.2	6.8	9.9	8.4	11.6	10.1	13.2	11.7									4.9	3.4
	06	4.2	2.5	5.9	4.1	7.6	5.8	9.2	7.4	10.9	9.1	12.5	10.8	14.2	12.4							5.8	4.1
	07			5.2	3.2	6.9	4.8	8.5	6.5	10.2	8.1	11.9	9.8	13.5	11.5	15.2	13.1					6.8	4.7
	08					6.2	3.8	7.9	5.5	9.5	7.2	11.2	8.8	12.8	10.5	14.5	12.1	17.8	15.5			7.8	5.4
	09							7.2	4.5	8.9	6.2	10.5	7.8	12.2	9.5	13.8	11.2	17.2	14.5	20.5	17.8	8.8	6.1
	10									8.2	5.2	9.8	6.9	11.5	8.5	13.2	10.2	16.5	13.5	19.8	16.8	9.7	6.8
	11											9.2	5.9	10.8	7.6	12.5	9.2	15.8	12.5	19.1	15.9	10.7	7.4
	12													10.1	6.6	11.8	8.2	15.1	11.6	18.4	14.9	11.7	8.1
AT063S	05	9.1	6.2	12	9.1	15	12	17.9	15	20.8	17.9	23.7	20.8									8.5	5.5
	06	8	4.5	10.9	7.4	13.8	10.3	16.8	13.3	19.7	16.2	22.6	19.1	25.6	22.1							10.2	6.7
	07			9.8	5.7	12.7	8.7	15.7	11.6	18.6	14.5	21.5	17.4	24.5	20.4	27.4	23.3					11.8	7.8
	08					11.6	7	14.6	9.9	17.5	12.8	20.4	15.8	23.3	18.7	26.3	21.6	32.1	27.5			13.5	8.9
	09							13.4	8.2	16.4	11.1	19.3	14.1	22.2	17	25.2	19.9	31	25.8	36.9	31.6	15.2	10
	10									15.3	9.4	18.2	12.4	21.1	15.3	24.1	18.2	29.9	24.1	35.8	29.9	16.9	11.1
	11											17.1	10.7	20	13.6	22.9	16.5	28.8	22.4	34.7	28.2	18.6	12.2
	12													18.9	11.9	21.8	14.8	27.7	20.7	33.5	26.6	20.3	13.3
AT075S	05	18	11.7	23.8	17.6	29.6	23.4	35.4	29.2	41.2	35	47.1	40.8									17.3	11.1
	06	15.8	8.3	21.6	14.1	27.4	19.9	33.2	25.7	39	31.5	44.8	37.3	50.7	43.2							20.8	13.3
	07			19.4	10.6	25.2	16.4	31	22.3	36.8	28.1	42.6	33.9	48.4	39.7	54.3	45.5					24.2	15.5
	08					23	13	28.8	18.8	34.6	24.6	40.4	30.4	46.2	36.2	52	42	63.7	53.7			27.7	17.7
	09							26.6	15.3	32.4	21.1	38.2	27	44	32.8	49.8	38.6	61.5	50.2	73.1	61.8	31.1	19.9
	10									30.2	17.7	36	23.5	41.8	29.3	47.6	35.1	59.2	46.7	70.9	58.4	34.6	22.1
	11											33.8	20	39.6	25.8	45.4	31.7	57	43.3	68.7	54.9	38.1	24.3
	12													37.4	22.4	43.2	28.2	54.8	39.8	66.4	51.4	41.5	26.5
AT088S	05	27.4	16.8	36.5	26	45.7	35.1	54.8	44.3	63.9	53.4	73.1	62.6									28.9	18.3
	06	23.7	11.1	32.8	20.2	42	29.3	51.1	38.5	60.3	47.6	69.4	56.8	78.6	65.9							34.7	22
	07			29.2	14.4	38.3	23.6	47.5	32.7	56.6	41.9	65.7	51	74.9	60.1	84	69.3					40.4	25.7
	08					34.6	17.8	43.8	26.9	52.9	36.1	62.1	45.2	71.2	54.4	80.4	63.5	98.6	81.8			46.2	29.4
	09							40.1	21.2	49.3	30.3	58.4	39.5	67.5	48.6	76.7	57.7	95	76	113	94.3	52	33
	10									45.6	24.5	54.7	33.7	63.9	42.8	73	52	91.3	70.2	110	88.5	57.8	36.7
	11											51.1	27.9	60.2	37	69.3	46.2	87.6	64.5	106	82.8	63.5	40.4
	12													56.5	31.3	65.7	40.4	84	58.7	102	77	69.3	44
AT100S	05	41.1	27	54.4	40.3	67.7	53.6	81	66.8	94.2	80.1	108	93.4									39.4	25.3
	06	36.1	19.1	49.3	32.4	62.6	45.7	75.9	58.9	89.2	72.2	103	85.5	116	98.8							47.3	30.4
	07			44.3	24.5	57.6	37.8	70.8	51.1	84.1	64.3	97.4	77.6	111	90.9	124	104					55.2	35.4
	08					52.5	29.9	65.8	43.2	79.1	56.5	92.3	69.7	106	83	119	96.3	146	123			63.1	40.5
	09							60.7	35.3	74	48.6	87.3	61.9	101	75.1	114	88.4	140	115	167	142	71	45.5
	10									68.9	40.7	82.2	54	95.5	67.3	109	80.5	135	107	162	134	78.8	50.6
	11											77.2	46.1	90.5	59.4	104	72.7	130	99	157	126	86.7	55.6
	12													85.4	51.5	98.7	64.8	125	92	152	118	94.6	60.7
AT115S	05	63.3	41.8	87.8	63.3	109	84.7	131	106	152	128	174	149									65.6	41
	06	58.1	28.7	79.6	50.1	101	71.6	123	93.1	144	115	165	136	187	158							78.7	49.3
	07			71.3	37	92.8	58.5	114	80	136	101	157	123	179	144	200	166					91.8	57.5
	08					84.6	45.4	106	66.9	128	88.3	149	110	171	131	192	153	235	196			105	65.7
	09							97.9	53.8	119	75.2	141	96.7	162	118	184	140	227	183	270	226	118	74
	10									111	62.1	133	83.6	154	105	176	127	219	170	261	212	131	82
	11											124	70.5	146	92	167	113	210	156	253	199	144	90.3
	12													138	78.8	159	100	202	143	245	186	157	98.5

单作用式输出扭矩Single-action output torque (Nm)

执行器型号 Actuator Model	弹簧数量 Spring quantity	空气压力扭矩 Air Pressure Torque																				弹簧复位扭矩 Torque spring return	
		2.5bar		3.0bar		3.5bar		4.0bar		4.5bar		5.0bar		5.5bar		6.0bar		7.0bar		8.0bar			
		0° 开始 Start	90° 结束 End	0° 开始 Start	90° 结束 End	0° 开始 Start	90° 结束 End	0° 开始 Start	90° 结束 End	0° 开始 Start	90° 结束 End	0° 开始 Start	90° 结束 End	0° 开始 Start	90° 结束 End	0° 开始 Start	90° 结束 End	0° 开始 Start	90° 结束 End	0° 开始 Start	90° 结束 End	0° 开始 Start	90° 结束 End
AT125S	05	85.9	55.9	114	84	141	111	169	139	197	167	224	194									82.5	52.5
	06	75.4	39.4	103	67	131	95	158	122	186	150	214	178	241	205							98.9	62.9
	07			92.6	50.6	120	78	148	106	176	134	203	161	231	189	259	217					115	73.4
	08					110	62	137	89.4	165	117	193	145	221	173	248	200	304	256			132	83.9
	09							127	72.9	155	101	182	128	210	156	238	184	293	239	348	294	148	94.4
	10									144	84	172	112	200	140	227	167	283	223	338	278	165	105
	11											161	95.3	189	123	217	151	272	206	327	261	181	115
	12													179	107	206	134	262	190	317	245	198	126
AT145S	05	135	88.2	178	132	222	175	265	219	309	262	352	305									129	82.3
	06	119	62.4	162	106	205	149	249	193	292	236	336	280	379	323							155	98.7
	07			146	80.1	189	124	232	167	276	210	319	254	363	297	406	341					181	115
	08					173	97.7	216	141	259	185	303	228	346	272	390	315	477	402			206	132
	09							200	115	243	159	286	202	330	246	373	289	460	376	547	463	232	148
	10									227	133	270	177	313	220	357	263	444	350	531	437	258	165
	11											254	151	297	194	340	238	427	324	514	411	284	181
	12													280	168	324	212	411	299	498	386	310	197
AT160S	05	171	117	228	174	285	231	341	287	398	344	455	401									166	112
	06	149	84	206	141	262	197	319	254	376	311	432	367	489	424							199	135
	07			183	108	240	164	296	221	353	278	410	334	466	391	523	448					233	157
	08					217	131	274	188	331	244	387	301	444	358	501	414	614	528			266	179
	09							252	154	308	211	365	268	422	324	478	381	592	494	705	608	299	202
	10									286	178	343	235	399	291	456	348	569	461	683	575	332	224
	11											320	201	377	258	433	315	547	428	660	541	365	247
	12													354	225	411	281	524	395	638	508	399	269
AT180S	05	225	146	301	222	378	299	454	375	531	452	607	528									237	158
	06	193	98.3	270	175	346	251	423	328	499	404	576	481	652	557							284	190
	07			238	127	315	204	391	280	468	357	544	433	621	510	697	586					332	221
	08					283	157	359	233	436	310	512	386	589	463	665	539	818	692			379	253
	09							328	186	404	262	481	339	557	415	634	492	787	645	940	798	426	284
	10									373	215	449	291	526	368	602	444	755	597	908	750	474	316
	11											418	244	494	320	571	397	724	550	877	703	521	347
	12													463	273	539	350	692	503	845	656	569	379
AT200S	05	319	216	425	323	532	429	638	535	744	641	850	748									315	212
	06	277	153	383	260	489	366	595	472	702	578	808	685	914	791							378	255
	07			340	197	447	303	553	409	659	515	765	622	872	728	978	834					441	297
	08					404	240	510	346	617	452	723	559	829	665	935	771	1148	984			504	340
	09							468	283	574	389	680	496	787	602	893	708	1105	921	1318	1133	567	382
	10									532	326	638	433	744	539	850	645	1063	858	1275	1070	630	425
	11											595	370	702	476	808	582	1020	795	1233	1007	693	467
	12													659	413	766	519	978	732	1191	944	756	510
AT240S	05	501	319	688	506	875	693	1062	880	1249	1067	1436	1254									616	434
	06	414	196	601	383	788	570	975	757	1162	944	1349	1131	1536	1318							740	521
	07			514	259	701	446	888	633	1075	820	1262	1007	1449	1194	1636	1381					863	608
	08					614	323	801	510	988	697	1175	884	1362	1071	1549	1258	1923	1632			986	695
	09							714	387	901	574	1088	761	1275	948	1463	1135	1837	1509	2211	1883	1109	782
	10									815	451	1002	638	1189	825	1376	1012	1750	1386	2124	1760	1233	869
	11											915	514	1102	701	1289	888	1663	1262	2037	1636	1356	955
	12													1015	578	1202	765	1576	1139	1950	1513	1479	1042
AT265S	05	780	565	1050	834	1319	1104	1589	1373	1858	1643	2128	1912									783	567
	06	667	408	936	678	1206	947	1475	1217	1745	1486	2014	1756	2284	2025							939	680
	07			823	521	1092	791	1362	1060	1631	1330	1901	1599	2170	1869	2440	2138					1096	794
	08					979	634	1249	904	1518	1173	1787	1443	2057	1712	2326	1981	2865	2520			1252	907
	09							1135	747	1405	1017	1674	1286	1943	1555	2213	1825	2752	2364	3291	2903	1409	1021
	10									1291	860	1561	1130	1830	1399	2100	1668	2638	2207	3177	2746	1565	1134
	11											1447	973	1717	1242	1986	1512	2525	2051	3064	2590	1722	1247
	12													1603	1086	1873	1355	2412	1894	2951	2433	1878	1361
AT330S	05	1333	1017	1803	1487	2273	1957	2743	2427	3214	2897	3684	3367									1334	1017
	06	1130	750	1600	1220	2070	1690	2540	2161	3010	2631	3480	3101	3950	3571							1600	1221
	07			1396	954	1866	1424	2337	1894	2807	2364	3277	2834	3747	3304	4217	3774					1867	1424
	08					1663	1157	2133	1627	2603	2097	3073	2567	3543	3037	4013	3508	4954	4448			2134	1628
	09							1930	1360	2400	1831	2870	2301	3340	2771	3810	3241	4750	4181	5690	5121	2400	1831
	10									2196	1564	2666	2034	3136	2504	3607	2974	4547	3914	5487	4854	2667	2035
	11											2463	1767	2933	2237	3403	2707	4343	3648	5283	4588	2934	2238
	12													2729	1971	3200	2441	4140	3381	5080	4321	3200	2442

□ 空气压力扭矩下列加黑部份为推荐数值，和弹簧复位扭矩的数值及弹簧数量相对应。

The following additional air pressure torque values recommended by the black majority, and spring return torque values and the corresponding number of spring.

外形及连接尺寸Dimensions and Connection （ mm ）

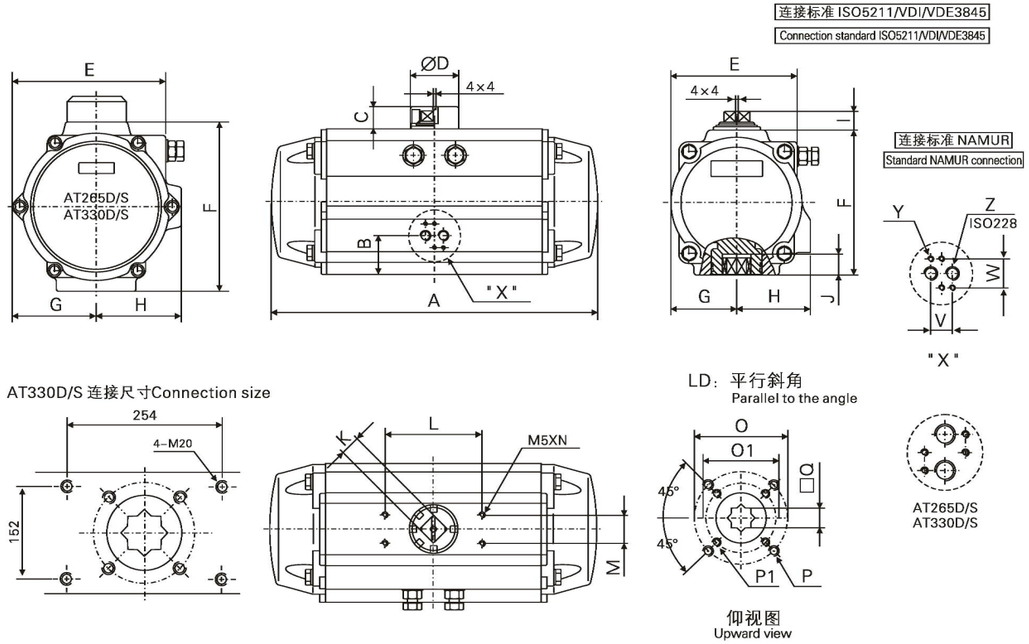

型号 Model	AT050	AT063	AT075	AT088	AT100	AT115	AT125	AT145	AT160	AT180	AT200	AT240	AT265	AT330
	D/S													
ISOflange	F04	F05	F05–07	F05–07	F07–10	F07–10	F07–10	F10–12	F10–12	F12	F14	F16	F16	F16
A	140.5	158.5	210.5	247.5	268.5	315	345	408.5	437.5	487	543	633	728	876
B	26.5	30	30.5	32.5	37.5	42.5	45	47.5	52	58.5	62.5	78.5	165	187
C	20	20	20	20	20	30	30	30	30	50	50	50	50	50
⌀ D	40	40	40	40	40	56	56	65	65	80	80	115	115	115
E	59	72	84.5	97.5	111	127	136	156.5	169	190.5	213	251	298.5	383
F	69	85	102	115	127	145	157	177	196	220.5	245	298.5	330	405
G	29	36	42.5	49.5	56	64	69.5	80	88	99	110	131	163.5	201
H	41.5	47	52	56.8	67	77	82	91.5	99	105	112	131	166	204.5
I	14.5	14.5	14.5	14.5	14.5	24.5	24.5	24.5	24.5	44.5	44.5	44.5	44.5	44.5
Jmim	12	16	16	19	19	24	24	29	29	29	38	38	48	57
K	11	11	17	17	17	27	27	27	27	36	36	36	36	36
L	80	80	80	80	80	80	80	80	80	130	130	130	130	130
M	30	30	30	30	30	30	30	30	30	30	30	30	30	30
N	4	8	8	8	8	8	8	8	8	8	8	8	8	8
⌀ O1	42	50	50	50	70	70	70	102	102	125	140	165	165	165
⌀ O	–	–	70	70	102	102	102	125	125	–	–	–	–	–
P1	4–M6	4–M6	4–M6	4–M6	4–M8	4–M8	4–M8	4–M10	4–M10	4–M12	4–M16	4–M20	4–M20	4–M20
P	–	–	4–M8	4–M8	4–M10	4–M10	4–M10	4–M12	4–M12	–	–	–	–	–
□Q	11	14	14	17	17	22	22	27	27	27	36	36	46	55
V	24	24	24	24	24	24	24	24	24	24	24	40	40	40
W	32	32	32	32	32	32	32	32	32	32	32	45	45	45
Y	M5×8	M5×8	M5×8	M5×8	M5×8	M5×8	M5×8	M5×8	M5×8	M5×8	M5×8	M6×10	M6×10	M6×10
Z	1/8"	1/8"	1/8"	1/8"	1/4"	1/4"	1/4"	1/4"	1/4"	1/4"	1/4"	3/8"	1/2"	1/2"

输出孔连接尺寸（定制）Hole connecting the output size (custom)（mm)

H：平行对边 Parallel to the edge

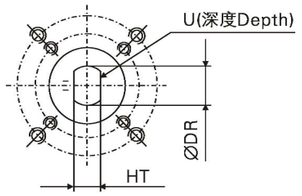

仰视图
Upward view

W：二个键槽 2keyway

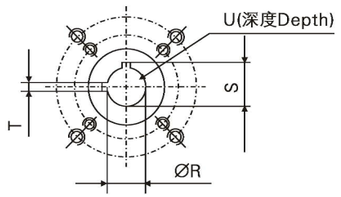

仰视图
Upward view

注：可根据客户尺寸规格定制制造
Note: Custom sizes can be manufactured according to customer

型 号 Model	AT050	AT063	AT075	AT088	AT100	AT115	AT125	AT145	AT160	AT180	AT200	AT240	AT265	AT330
	D/S													
ϕR	12.7	12.7	12.7	15.88	19.05	22.23	22.23	28.58	28.58	31.75	31.75	33.34	38.1	41.28
S	14.2	14.2	14.2	18.4	21.6	24.8	24.8	32.1	32.1	35.3	35.3	37.4	42.4	45.3
T	3	3	5	5	5	5	5	8	8	8	8	10	10	12
U	32	32	32	32	32	45	45	45	45	45	45	51	51	65
ϕDR	13	13	13	16.1	19.2	22.4	22.4	28.8	28.8	32	32	33.6	38.4	41.5
HT	10	10	10	12	14	17	17	22	22	24	24	27	27	32

全行程调节限位执行器
Full stroke adjustment limit actuator

新型气动执行器在两端提供特殊调节限位螺钉，客户可根据需要调节0°－90°、0°－120°或0°－180°范围内任意角度，在所有系列执行器上都可进行全行程调节。

New pneumatic actuator to provide special regulation limit at both ends of the screw, the customer can be adjusted according to 0°－90°,0°－120° or 0°－180° range of any angle, in all series actuators can be carried out on Full stroke adjustment.

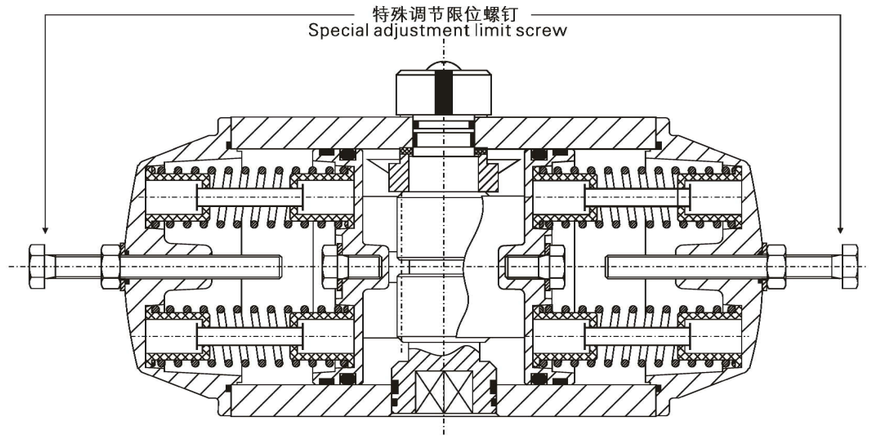

120°/180°行程执行器的外形及连接尺寸（双作用）
120°/180° Stroke actuator and Connection Dimensions (double acting)



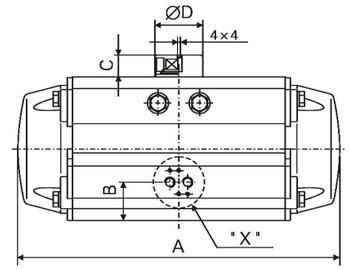

连接标准 ISO5211/VDI/VDE3845
Connection standard ISO5211/VDI/VDE3845

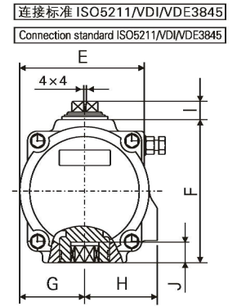

连接标准 NAMUR
Standard NAMUR connection

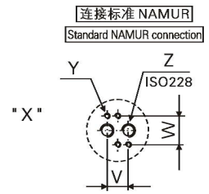

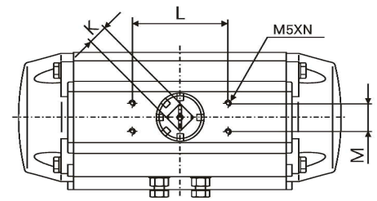

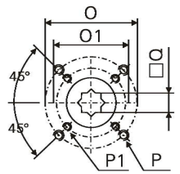

1、根据需要可提供其他型号规格执行器。
2、可提供不同行程的执行器，如140°/160°行程等。

1, according to specifications required to provide other types of actuator.
2, provides various trip actuator, such as 140°/160° itineraries.

型 号 Model	AT050	AT063	AT075	AT088	AT100	AT115	AT125	AT145	AT160	AT180	AT200	AT240	AT265	AT330
	D/S													
ISOflange	–	F05	F05-7	–	F07-10	–	F07-10	–	F10-12	–	F14	–	–	–
A(120°)	–	183	243	–	309	–	397	–	504	–	622	–	–	–
A(180°)	–	225	305	–	385	–	498	–	630	–	775	–	–	–
B	–	30	30.5	–	37.5	–	45	–	52	–	62.5	–	–	–
C	–	20	20	–	20	–	30	–	30	–	50	–	–	–
∅D	–	40	40	–	40	–	56	–	65	–	80	–	–	–
E	–	72	84.5	–	111	–	136	–	169	–	213	–	–	–
F	–	85	102	–	127	–	157	–	196	–	245	–	–	–
G	–	36	42.5	–	56	–	69.5	–	88	–	110	–	–	–
H	–	47	52	–	67	–	82	–	99	–	112	–	–	–
I	–	14.5	14.5	–	14.5	–	24.5	–	24.5	–	44.5	–	–	–
Jmim	–	16	16	–	19	–	24	–	29	–	38	–	–	–
K	–	11	17	–	17	–	27	–	27	–	36	–	–	–
L	–	80	80	–	80	–	80	–	80	–	130	–	–	–
M	–	30	30	–	30	–	30	–	30	–	30	–	–	–
N	–	8	8	–	8	–	8	–	8	–	8	–	–	–
∅O1	–	50	50	–	70	–	70	–	102	–	140	–	–	–
∅O	–	–	70	–	102	–	102	–	125	–	–	–	–	–
P1	–	4-M6	4-M6	–	4-M8	–	4-M8	–	4-M10	–	4-M16	–	–	–
P	–	–	4-M8	–	4-M10	–	4-M10	–	4-M12	–	–	–	–	–
□Q	–	14	14	–	17	–	22	–	27	–	36	–	–	–
∅R	–	–	–	–	–	–	–	–	–	–	–	–	–	–
S	–	–	–	–	–	–	–	–	–	–	–	–	–	–
T	–	–	–	–	–	–	–	–	–	–	–	–	–	–
U	–	–	–	–	–	–	–	–	–	–	–	–	–	–
V	–	24	24	–	24	–	24	–	24	–	24	–	–	–
W	–	32	32	–	32	–	32	–	32	–	32	–	–	–
Y	–	M5×8	M5×8	–	M5×8	–	M5×8	–	M5×8	–	M5×8	–	–	–
Z	–	1/8"	1/8"	–	1/4"	–	1/4"	–	1/4"	–	1/4"	–	–	–

三位置气动执行器

三位置气动执行器有二种型号0° –45° –90° 和0° –90° –180° ，在气口 “2” 进气后活塞向两端运动被两端设计有辅助活塞产生机械限制来实现中间位置的，可直接利用外面两端调节螺栓很容易调节中间位置角度，如20° 、30° 、50° 、75° 和95° 、120° 、130° 、150° 、175° 等。

Three position pneumatic actuator

Three position pneumatic actuator has two kinds of models 0 ° –45 ° –90 ° and 0 ° –90 ° –180 ° , the air intake "2" after the intake ends of the piston movement was designed to both ends there are auxiliary pistons produce mechanical constraints to achieve a middle position , can be used directly out of both ends of the adjusting screw is easy to adjust the middle point of view, such as 20 ° , 30 ° , 50 ° , 75 ° and 95 ° , 120 ° , 130 ° , 150 ° , 175 ° and so on.

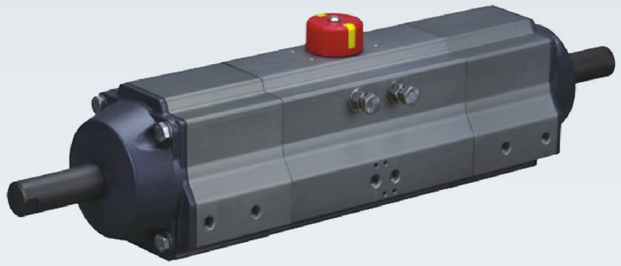

工作原理

三位置气动执行器的操作需要设计一套电磁阀控制回路系统来完成操作，其控制原理如下：

Operating principles:

Three position pneumatic actuator operation requires the design of a solenoid valve control loop system to complete the operation, the control principle as follows:

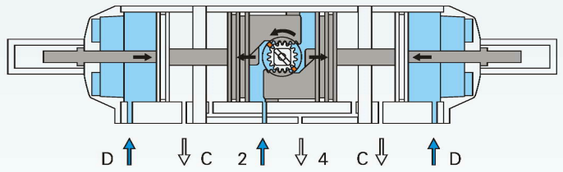

位置1（ 中间位置 ）

气源压力同时进入2口和D口，空气从4口和C口排出，2口作为内部活塞移动，D口是通过辅助活塞推杆限制内部活塞定位在预定的中间位置。

Position 1 (middle)

Air pressure at the same time and D into the two port, air from the exhaust port 4 and C, 2 as an internal piston, D mouth is by putting restrictions on secondary piston within the piston located in the middle of booking.

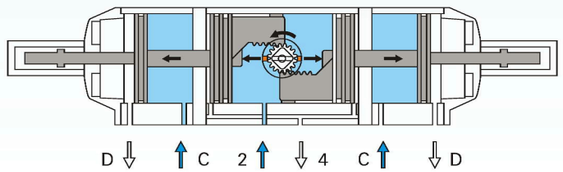

位置2（ 全开位置 ）

气源压力同时进入2口和C口，空气从4口和D口排出，2口的内部活塞继续移动，C口为解除辅助活塞推杆限制定位，使内部活塞顺利到达全开位置。

Position 2 (open position)

Air pressure at the same time into two and the C port, air from the discharge port 4, and D, two of the internal piston to move, C auxiliary port for the lifting of restrictions on putting the piston position to reach the fully open position within the piston smoothly.

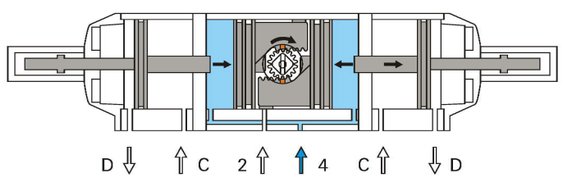

位置3（ 全关位置 ）

气源压力进入4口，空气从2口排出，内部活塞向中间方向移动到达全关位置。

可提供0° –45° –90° 弹簧回位型号规格，在断气断电时（ 或气源故障 ），通过弹簧迫使内部活塞回位到全关位置。

Position 3 (fully closed position)

Air pressure into four, the air discharged from the two, the internal piston moves to the middle reach the fully closed position. provides 0 ° –45 ° –90 ° spring return position type specification, when somebody stops breathing power(or gas source failure),an internal piston back by spring force to the fully closed position.

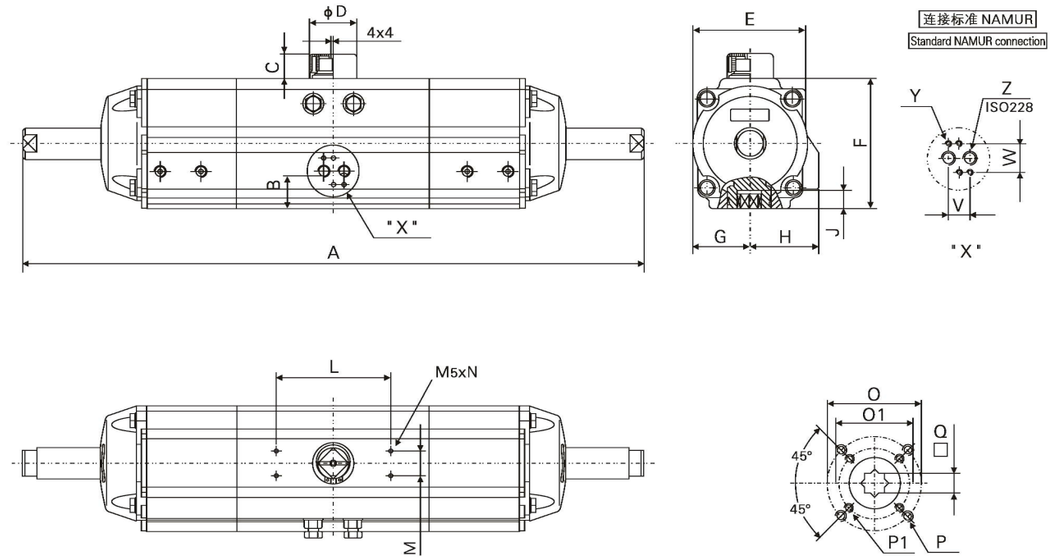

外形及连接尺寸 Dimensions and Connection

型号 Model	A		B	C	ϕd	E	F	G	H	J	L	M	N	O1	O	P1	P	□Q	V	W	Y	Z
	0°–45°–90°	0°–90°–180°																				
AT063	390	440	30	20	40	72	85	36	47	16	80	30	8	50	–	4–M6	–	14	24	32	M5x8	1/8"
AT075	480	570	30.5	20	40	84.5	102	42.5	52	16	80	30	8	50	70	4–M6	4–M8	14	24	32	M5x8	1/8"
AT100	600	710	37.5	20	40	111	127	56	67	19	80	30	8	70	102	4–M8	4–M10	17	24	32	M5x8	1/4"
AT125	720	910	45	30	56	136	157	69.5	82	24	80	30	8	70	102	4–M8	4–M10	22	24	32	M5x8	1/4"
AT160	915	1130	52	30	65	169	196	88	99	29	80	30	8	102	125	4–M10	4–M12	27	24	32	M5x8	1/4"
AT200	1155	1400	62.5	50	80	213	245	110	112	38	130	30	8	140	–	4–M16	–	36	24	32	M5x8	1/4"

双作用式输出扭矩(Nm) Double-acting type output torque (Nm)

执行器型号 Actuator Model	2.5bar	3.0bar	3.5bar	4.0bar	4.5bar	5.0bar	5.5bar	6.0bar	7.0bar	8.0bar
AT063D	14.7	17.6	20.5	23.5	26.4	29.3	32.2	35.2	41.0	46.9
AT075D	29.1	34.9	40.7	46.5	52.3	58.2	64.0	69.8	81.4	93.0
AT100D	66.5	79.7	93.0	106	120	133	146	160	186	213
AT125D	138	166	194	221	249	277	304	332	387	443
AT160D	283	340	397	453	510	567	623	680	793	907
AT200D	531	638	744	850	956	1063	1169	1275	1488	1700

0° -45° -90° 型单作用式输出扭矩（弹簧复位）（Nm）
0 ° -45 ° -90 ° single-action output torque (spring return) (Nm)

执行器型号 Actuator Model	弹簧数量 Spring quantity	空气压力扭矩 Air Pressure Torque																				弹簧复位扭矩	
		2.5bar		3.0bar		3.5bar		4.0bar		4.5bar		5.0bar		5.5bar		6.0bar		7.0bar		8.0bar			
		0° 开始 Start	90° 结束 End	0° 开始 Start	90° 结束 End	0° 开始 Start	90° 结束 End	0° 开始 Start	90° 结束 End	0° 开始 Start	90° 结束 End	0° 开始 Start	90° 结束 End	0° 开始 Start	90° 结束 End	0° 开始 Start	90° 结束 End	0° 开始 Start	90° 结束 End	0° 开始 Start	90° 结束 End	0° 开始 Start	90° 结束 End
AT063S	05	9.1	6.2	12	9.1	15	12	17.9	15	20.8	17.9	23.7	20.8									8.5	5.5
	06	8	4.5	10.9	7.4	13.8	10.3	16.8	13.3	19.7	16.2	22.6	19.1	25.6	22.1							10.2	6.7
	07			9.8	5.7	12.7	8.7	15.7	11.6	18.6	14.5	21.5	17.4	24.5	20.4	27.4	23.3					11.8	7.8
	08					11.6	7	14.6	9.9	17.5	12.8	20.4	15.8	23.3	18.7	26.3	21.6	32.1	27.5			13.5	8.9
	09							13.4	8.2	16.4	11.1	19.3	14.1	22.2	17	25.2	19.9	31	25.8	36.9	31.6	15.2	10
	10									15.3	9.4	18.2	12.4	21.1	15.3	24.1	18.2	29.9	24.1	35.8	29.9	16.9	11.1
	11											17.1	10.7	20	13.6	22.9	16.5	28.8	22.4	34.7	28.2	18.6	12.2
	12													18.9	11.9	21.8	14.8	27.7	20.7	33.5	26.6	20.3	13.3
AT075S	05	18	11.7	23.8	17.6	29.6	23.4	35.4	29.2	41.2	35	47.1	40.8									17.3	11.1
	06	15.8	8.3	21.6	14.1	27.4	19.9	33.2	25.7	39	31.5	44.8	37.3	50.7	43.2							20.8	13.3
	07			19.4	10.6	25.2	16.4	31	22.3	36.8	28.1	42.6	33.9	48.4	39.7	54.3	45.5					24.2	15.5
	08					23	13	28.8	18.8	34.6	24.6	40.4	30.4	46.2	36.2	52	42	63.7	53.7			27.7	17.7
	09							26.6	15.3	32.4	21.1	38.2	27	44	32.8	49.8	38.6	61.5	50.2	73.1	61.8	31.1	19.9
	10									30.2	17.7	36	23.5	41.8	29.3	47.6	35.1	59.2	46.7	70.9	58.4	34.6	22.1
	11											33.8	20	39.6	25.8	45.4	31.7	57	43.3	68.7	54.9	38.1	24.3
	12													37.4	22.4	43.2	28.2	54.8	39.8	66.4	51.4	41.5	26.5
AT100S	05	41.1	27	54.4	40.3	67.7	53.6	81	66.8	94.2	80.1	108	93.4									39.4	25.3
	06	36.1	19.1	49.3	32.4	62.6	45.7	75.9	58.9	89.2	72.2	103	85.5	116	98.8							47.3	30.4
	07			44.3	24.5	57.6	37.8	70.8	51.1	84.1	64.3	97.4	77.6	111	90.9	124	104					55.2	35.4
	08					52.5	29.9	65.8	43.2	79.1	56.5	92.3	69.7	106	83	119	96.3	146	123			63.1	40.5
	09							60.7	35.3	74	48.6	87.3	61.9	101	75.1	114	88.4	140	115	167	142	71	45.5
	10									68.9	40.7	82.2	54	95.5	67.3	109	80.5	135	107	162	134	78.8	50.6
	11											77.2	46.1	90.5	59.4	104	72.7	130	99	157	126	86.7	55.6
	12													85.4	51.5	98.7	64.8	125	92	152	118	94.6	60.7
AT125S	05	85.9	55.9	114	84	141	111	169	139	197	167	224	194									82.5	52.5
	06	75.4	39.4	103	67	131	95	158	122	186	150	214	178	241	205							98.9	62.9
	07			92.6	50.6	120	78	148	106	176	134	203	161	231	189	259	217					115	73.4
	08					110	62	137	89.4	165	117	193	145	221	173	248	200	304	256			132	83.9
	09							127	72.9	155	101	182	128	210	156	238	184	293	239	348	294	148	94.4
	10									144	84	172	112	200	140	227	167	283	223	338	278	165	105
	11											161	95.3	189	123	217	151	272	206	327	261	181	115
	12													179	107	206	134	262	190	317	245	198	126
AT160S	05	171	117	228	174	285	231	341	287	398	344	455	401									166	112
	06	149	84	206	141	262	197	319	254	376	311	432	367	489	424							199	135
	07			183	108	240	164	296	221	353	278	410	334	466	391	523	448					233	157
	08					217	131	274	188	331	244	387	301	444	358	501	414	614	528			266	179
	09							252	154	308	211	365	268	422	324	478	381	592	494	705	608	299	202
	10									286	178	343	235	399	291	456	348	569	461	683	575	332	224
	11											320	201	377	258	433	315	547	428	660	541	365	247
	12													354	225	411	281	524	395	638	508	399	269
AT200S	05	319	216	425	323	532	429	638	535	744	641	850	748									315	212
	06	277	153	383	260	489	366	595	472	702	578	808	685	914	791							378	255
	07			340	197	447	303	553	409	659	515	765	622	872	728	978	834					441	297
	08					404	240	510	346	617	452	723	559	829	665	935	771	1148	984			504	340
	09							468	283	574	389	680	496	787	602	893	708	1105	921	1318	1133	567	382
	10									532	326	638	433	744	539	850	645	1063	858	1275	1070	630	425
	11											595	370	702	476	808	582	1020	795	1233	1007	693	467
	12													659	413	766	519	978	732	1191	944	756	510

□ 空气压力扭矩下列加黑部份为推荐数值，和弹簧复位扭矩的数值及弹簧数量相对应。

□ The following additional air pressure torque values recommended by the black majority, and spring return torque values and the corres ponding number of spring.

可配符合VID/VIE3845、NAMUR
标准的电磁阀
It's applicable for the solenoid valve that is in line with VID/VIE3845 and NAMUR standards.



可配符合VID/VIE3845、NAMUR
标准的限位开关
It's applicable for the limit switch that is in line with VID/VIE3845 and NAMUR standards.



可配符合VID/VIE3845
标准的定位器
It's applicable for the valve positioner that is in line with VID/VIE3845 standard.



可配手操离合器
It's applicable for the manual clutch.



气动球阀
Pneumatic ball valve

气动蝶阀
Pneumatic butterfly valve

